Sumitomo Drive Technologies

Always on the Move

HYPONIC DRIVE

Operating and Maintenance Manual No. NM2201E-5

Safety and Other Precautions

- Carefully read this maintenance manual and all accompanying documents before use (installation, operation, maintenance, inspection, etc.). Thoroughly understand the machine, information about safety, and all precautions for correct operation. Retain this manual for future reference.
- Pay close attention to the "DANGER" and "CAUTION" warnings regarding safety and proper use.

⚠ DANGER : Improper handling may result in physical damage, serious personal injury and/or death.

⚠ CAUTION : Improper handling may result in physical damage and/or personal injury.

Matters described in **⚠ CAUTION** may lead to serious danger depending on the situation. Be sure to observe important matters described herein.

⚠ DANGER

- Transport, installation, plumbing, wiring, operation, maintenance, and inspections should be performed by trained technicians; otherwise, electric shock, personal injury, fire, or damage to the equipment may result.
- When using the equipment in conjunction with an explosion proof motor, a technician with electrical expertise should supervise the transport, installation, plumbing, wiring, operation, maintenance and inspection of the equipment so as to avoid a potentially nazardous sitnation that may result in electrical shock, fire, explosion, personal injury and/or damage to the equipment.
- When the unit is to be used in a system for human, transport a secondary safety device should be installed to minimize chances of accidents that may result in personal injury, death, or damage to the equipment.
- When the unit is to be used for an elevator, install a safety device on the elevator side to prevent it from falling; otherwise, personal injury, death, or damage to the equipment may result.

How to Refer to the Maintenance Manual

● This maintenance manual is common for Hyponic drives, gearmotors with brake (Brake motors). The symbols shown below appear in the upper right corner of each page to indicate the classification. Read the applicable pages. On **COMMON** pages, these symbols identify distinctions between gearmotors and reducers.

Specifications	Common specifications	Gearmotor	
		Without Brake	With Brake(Brakemotors)
Symbol	COMMON		B

CONTENTS

1. Inspection Upon Delivery

⚠ CAUTION

- Unpack the unit after verifying that it is positioned right side up; otherwise, injury may result.
- Verify that the unit received is in fact the one you ordered. Installing the wrong unit may result in personal injury or equipment damage.
- Do not remove the rating plate.

Verify the items listed below upon receiving the gearmotor. If a nonconformity or problem is found, contact our nearest agent, distributor, or sales office.

(1) Does the information on the rating plate conform to what you ordered ?
(2) Was there any part broken during transport ?
(3) Are all bolts and nuts tightened firmly ?

1–1) How to Refer to the Rating Plate

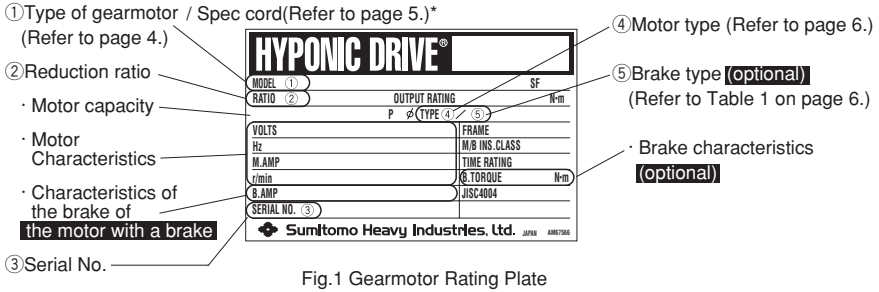

Fig.1 Gearmotor Rating Plate

* There are cases that the spec cord is not written.

· When making an inquiry, advise us of ① the gearmotor type, ② reduction ratio, and ③ serial No.

1–2) Lubrication Method COMMON

All models of Hyponic drives, are grease-lubricated. They are grease-packed when shipped from our factory and arrive ready to operate.

1–3) Nomenclature of Gearmotor

Respective codes and Hyponic nomenclature are shown below. Please verify that the type of gearmotor you received conforms to what you ordered.

R N Y M 01 — 1010 — B — 5

Product	
R	Hyponic

Output shaft direction	
N	Universal

Mounting	
Y	Hollow
F	Flange
H	Foot

Input Connection	
M	Integral motor

Input Power	
0015	15W
0025	25W
004	40W
006	60W
009	90W
01	0.1kW
02	0.2kW
03	0.25kW
05	0.4kW
08	0.55kW
1	0.75kW
1H	1.1kW
2	1.5kW
3	2.2kW
4	3.0kW
5	3.7kW
8	5.5kW
10	7.5kW
15	11kW

RNYM		RNFM	RNHM
		01	
03		03	
		05	
07		07	
		15	
17		17	
1010	190	190	190
1110	20	20	20
1120	23	23	23
1210	25	25	25
1220	271	270	270
1230			
1240		1240	1240
1310	30	30	30
1320	33	33	33
1330	35	35	35
	361	36	36
	371	370	370
1340		1340	1340
1410	40	40	40
1420	43	43	43
1430	45	45	45
	461	46	46
	471	470	470
1440		1440	1440
1510	50	50	50
1520	53	53	53
1521	54	54	54
1522	55	55	55
1530	56	56	56
1531			
1540		1540	1540
1630	60	1630	60
1631	63	1631	63
1632	64		64
1633			
1634			
1640		1640	

Shaft Spec.	Symbol
Metric Size	Blank
Inch Size	Y
AGMA Ⅰ	YA
AGMA Ⅱ	YB
AGMA Ⅲ	YC

Brake	
Blank	Without brake
B	With brake
C	With brake and brake release lever device

Reduction ratio

Suffix			
Solid shaft options		Motor spec.	
X1	Plug-in shaft	Blank	With 3-phase motor
P1	Extended flange, Left (Viewed from motor)	CA	With single-phase capacitor run type motor
Q1	Extended flange, Right (Viewed from motor)	CB	With single-phase capacitor start and capacitor-run type motor
J1	Bolt on feet	CC	With single-phase reversible motor
		AV	With motor for inverter
		ES	With 3-phase high-efficiency motor

Shaft direction		
Code	Viewed from motor	Viewed from above
Blank	–	
L	Left	
R	Right	
T	Both	

1–4) Spec cord of Gearmotor

Respective codes and motor nomenclature are shown below. Please verify that the gearmotor type you received conforms to what you ordered.

Notes : Because the spec cord is displayed when the customer directs it, it mighe not be writen in the rating plate and statemen of delivery.

J	2	N	P	B	B
①	②	③	④	⑤	⑥

1st digit	International standard
J	JIS (Japan)
U	UL
N	NEMA
E	CE Marking
C	CCC
A	CSA
9	Others

3st digit	Location
N	Indoor type
A	Outdoor type
B	Light dust proof type
E	Increased safety eG3
F	Increased safety eG3(Outdoor)
W	Water proof type(IP65)
9	Others

5st digit	Position of terminal box(Viewed from output side)		
L	Left	R	Right
T	Top	B	Bottom

4st digit	Terminal box type
A	Made of Aluminum
B	Made of Aluminum,with terminal plate
P	Made of Plastic
S	Made of Steel
Q	Made of Plastic, with terminal plate
T	Made of Steel, with terminal plate
X	Without terminal box
C	With cabtyre cable

6st digit	Direction of with drawing lead wire		
A		B	
C		D	
		X	Without terminal box

1st digit	Motor Type	2st digit 1	2	4	D	9
J (JIS)	Three phase motor	—	200/220 50/60	400/440 50/60	—	Other voltage
	Single phase motor	100 50/60	—	—	100/200 50/60	
	Motor for inverter	—	200/220 60	400/440 60	—	
	High efficieney type motor	—	200/220 50/60	400/440 50/60	—	

1st digit	Motor Type	2st digit 2	4	8	9
U (UR)	Three phase motor	230 60	460 60	—	Other voltage
	Single phase motor	230 60	—	115 60	
	Motor for inverter	230 60	460 60	—	
	High efficieney type motor	—	—	—	

1st digit	Motor Type	2st digit 2	4	8	9
N (NEMA)	Three phase motor	230 60	460 60	—	Other voltage
	Single phase motor	230 60	—	115 60	
	Motor for inverter	230 60	460 60	—	
	High efficieney type motor	—	—	—	

1st digit	Motor Type	2st digit 2	4	8	9
E (CE)	Three phase motor	200/220 50/60	400/440 50/60	230/400 50	Other voltage
	Single phase motor	—	—	—	
	Motor for inverter	—	—	—	
	High efficieney type motor	—	—	—	

1st digit	Motor Type	2st digit A	3	9
C (CCC)	Three phase motor	230 60	380 50	Other voltage
	Single phase motor	220 50	—	
	Motor for inverter	—	—	
	High efficieney type motor	—	—	

1st digit	Motor Type	2st digit 5	6	9
A (CSA)	Three phase motor	230 60	460 60	Other voltage
	Single phase motor	—	—	
	Motor for inverter	—	—	
	High efficieney type motor	230 60	230 60	

1–5) Type of Motor

Respective codes and motor nomenclature are shown below. Please verify that the gearmotor type you received conforms to what you ordered.

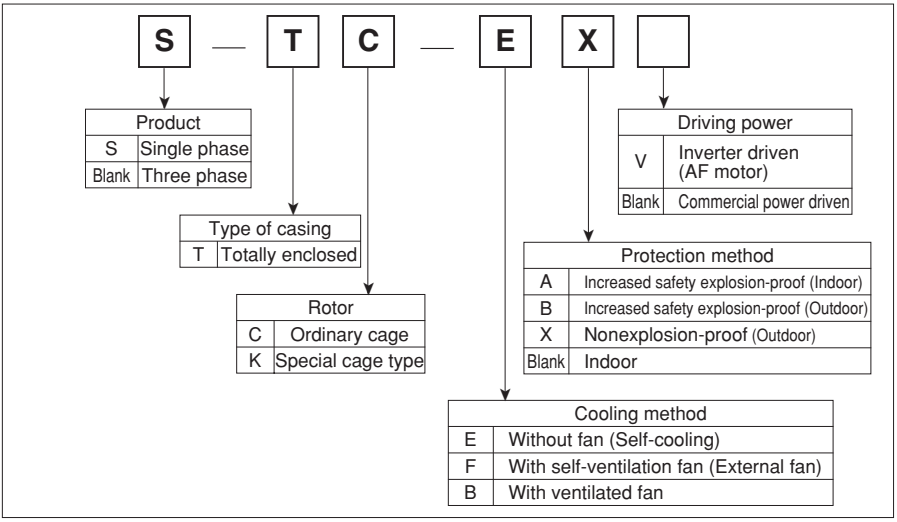

1–6) Brake Type

The types of brake and the relationship between the motor capacity and brake delay time are as follows:

Table 1-1 Brake Type (15W–90W)

Brake Type	Frame size	Motor capacity		Brake delay time (sec)	
		3-phase motor	Single phase motor	Normal braking action (3-phase·single phase motor)	Fast braking action
SB-004	01, 03, 05, 07	15, 25, 40, 60W	15, 25, 40W	0.1–0.2	0.005–0.015
FB-003	17	40W	40W	0.1–0.12	0.05–0.06
FB-005	15, 17	60, 90W	60, 90W		
FB-01A1, FB-01A	36, 361	90W	———	0.15–0.2	0.015–0.02

Table 1-2 Brake Type (0.1kW–5.5kW)

Brake Type	Motor capacity			Brake delay time (sec)		
	3-phase motor	3-phase inverter motor	Single phase motor	Normal braking action (3-phase·single phase motor)	Normal braking action (3-phase invertor motor)	Fast braking action
FB-01A1, FB-01A	0.1kW		0.1kW	0.15–0.2		0.015–0.02
FB-02A1, FB-02A	0.2kW	0.1kW	0.2kW		0.08–0.12	
FB-05A1, FB-05A	0.4kW	0.2kW		0.1–0.15	0.03–0.07	0.01–0.015
FB-1D(FB-1B)	0.75kW	0.4kW	0.4kW	0.2–0.3	0.1–0.15	0.01–0.02
FB-2D(FB-2B1,FB-2B)	1.5kW	0.75kW	0.75kW			
FB-3D(FB-3B)	2.2kW	1.5kW		0.3–0.4	0.15–0.2	
FB-5B	3.7kW	2.2kW		0.4–0.5	0.2–0.25	
FB-8B	5.5kW	3.7kW		0.3–0.4	0.1–0.15	
FB-10B	7.5kW	5.5kW		0.7–0.8	0.25–0.3	0.03–0.04
FB-15B	11kW	7.5kW		0.5–0.6	0.15–0.2	

Notes : 1. The standard brakes for 0.1, 0.2, 0.25 and 0.4kW 3-phase motors and 0.1, 0.2kW 3-phase inverter motors are FB-01A1, 02A1, and 05A1, but FB-01A, 02A, or 05A may be used for special motors. Check the name plate.
2. ( )in "Brake Type" is old type brake.

2. Storage

When storing Hyponic drives for any extended period of time, consider the following important points:

2–1) Storage Location

Store the unit in a clean, dry place indoors.

· Avoid storage outdoors or in places with humidity, dust, sudden temperature changes or corrosive gas.

2–2) Storage Period

(1) Storage period should be less than 1 year.
(2) When the storage period exceeds 1 year, special rust prevention is necessary. Contact the factory for details.
(3) Export models need export rust prevention. Contact the factory for details.

2–3) Use After Storage

(1) Oil seals will deteriorate when exposed to high temperatures and UV rays. Inspect the oil seals before operation. Replace the oil seals after long-term storage if there is any sign of deterioration.
(2) After starting the Hyponic drives or reducer, verify that there is no abnormal sound, vibration or heat built-up. If supplied as a brakemotor verify that the brake operates properly. If any anomaly is observed, contact our nearest agent, distributor or sales office.

3. Transport

⚠ DANGER

- Do not stand directly under a unit suspended by a crane or other lifting mechanism; otherwise, injury or death may result.

⚠ CAUTION

- Exercise ample care so as not to drop the gearmotor or reducer. When a hanging bolt or hole is provided, be sure to use it. After mounting a cyclo unit to the equipment, do not hoist the entire machine using the hanging bolt or hole; otherwise, personal injury or damage to the equipment and/or lifting device may result.
- Before hoisting, refer to the rating plate, crate, outline drawing, catalog, etc. for the weight of the Hyponic drives or reducer. Never hoist a unit that exceeds the rating of the crane or other mechanism being used to lift it; otherwise, personal injury or damage to the equipment and/or lifting device may result.

4. Installation

⚠ DANGER

- Do not use a standard unit in an explosive atmosphere (which is likely to be filled with explosive gas or steam). Under such conditions, an explosion-proof motor should be used; otherwise, electric shock, personal injury, fire, explosion, or damage to the equipment may result.

⚠ CAUTION

- Do not use the cyclo gearmotor for purposes other than those shown on the rating plate or in the manufacturing specifications; otherwise, electric shock, personal injury, or damage to the equipment may result.
- Do not place flammable objects around the gearmotor; otherwise, fire may result.
- Do not place any object around the gearmotor; that will hinder ventilation; otherwise, excessive heat may build-up and cause burns or even fire.
- Do not step on or hang from the gearmotor; otherwise injury may result.
- Do not touch the shaft end of the gearmotor, inside keyways, or the edge of the motor cooling fan with bare hands; otherwise, injury may result.
- When the unit is used in food processing applications vulnerable to oil contamination, install an oil pan or other such device to cope with oil leakage due to failure or breakdown; otherwise, oil leakage may damage products.

4–1) Installation Location

Ambient temperature:	-10°C to +40°C
Ambient humidity:	85% max.
Altitude:	1000 m max.
Ambient atmosphere:	There should be no corrosive gas, explosive gas, or steam. The location should be well ventilated without dust.
Installation location:	Indoors, with minimal dust and no water contact.

Water proof/Dust proof type

Note) IP65 is not available for underwater or high water pressured condition.

IP65: The IP indication that represents dust-proofing and water-proofing grades is prescribed by IEC529 and IEC34-5. "6" of IP65 represents a "perfect dust-proofing structure" that is the highest-grade protection from contact or entry of solids, while "5" represents protection from water, ensuring protection from water jets in all directions.
The motor has a structure that permits motor operation without any trouble even if it is exposed to water jets in all directions from a nozzle.

Test conditions: A nozzle of 6.3 mm in I.D. is placed at a distance of 3 m from the test piece and water jetted out of the nozzle under pressure of 30 kPa at the flow rate of 12.5 l/min is directed at the test piece in all directions for three minutes. After that, there should be no abnormality. The motor cannot be used underwater or in places exposed to high-pressure water jets.

- Units made to special specifications are necessary for installation under conditions other than the above.
- Units made according to the outdoor, explosion-proof or other specifications can be used under the specified conditions without any problem.
- Install units where inspection, maintenance, and other such operations can be easily carried out.
- Install units on a sufficiently rigid base.

4–2) Installation Angle

There is no restriction on the installation angle.
(For outdoor type gearmotors, standard installation angle is horizontal in the axial direction. Contact us for other axial directions.)

4–3) Flange mounting (RNFM series), Foot mounting (RNHM series)

Use bolt shown under Table 2. and refer to 5. coupling with other machines. (P14-18)

Table 2 Bolt Size

Series	Frame Size	Size of bolt
RNFM	01#, 03#	Hexagon socket head bolt M5
	05#, 07#, 15#, 17#, 190#	Hexagon socket head bolt M6
	20#, 23#, 25#, 270#, 1240#	Hexagon socket head bolt M8
	30#, 33#, 35#, 36#, 370#, 1340#	Hexagon socket head bolt M10
	40#, 43#, 45#, 46#, 470#, 1440#	Hexagon socket head bolt M10
	50#, 53#, 54#, 55#, 56#	Hexagon socket head bolt M12
	1540#	Hexagon socket head bolt M16
	1630#, 1631#, 1640#	Hexagon socket head bolt M20
RNHM	20#, 23#, 25#, 190#, 270#	Bolt M8
	30#, 33#, 35#, 36#, 370#, 1340#	Bolt M10
	40#, 43#, 45#, 46#, 470#, 1440#	Bolt M12
	50#, 53#, 54#, 55#, 56#, 1540#	Bolt M16
	60#, 63#, 64#	Bolt M20

4–4) Hollow shaft (RNYM series)

There are (1) Torque arm mounting and (2) Flange and On-bed mounting for Hollow shaft.

(1) Torque arm mounting

(a-1) How to set the shaft (03#, 07#, 17#, 1010#)

Apply molybdenum disulfide grease to the surface of a driven shaft and the inner surface of a hollow shaft. Then insert the Drive into the driven shaft.
If the fitting is too tight, lightly knock the end face of a hollow output shaft with a wooden hammer for smooth insertion. Do avoid knocking the casing. We recommend making a jig shown Fig 2. Using this jig, you can insert the Drive smoothly.

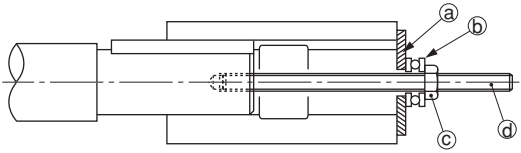

Fig.2 Jig

ⓐ.....Spacer
ⓑ.....Thrust Bearing
ⓒ.....Nut
ⓓ.....Bolt

The hollow shaft is made according to the tolerances of JIS H8. If you experience impact or notice a large radial load with the hollow shaft, further tighten the fitting between the hollow shaft and the driven shaft. (We recommend JIS js6 or k6 as the tolerance of a driven shaft.)

(b-1) Method to avoid the Drive from slipping away from a driven machine. (Fig.3–5)
(03#, 07#, 17#, 1010#)

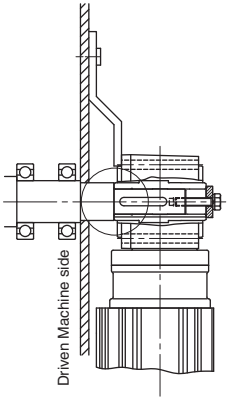

Fig.3 Fixed by spacer and plate

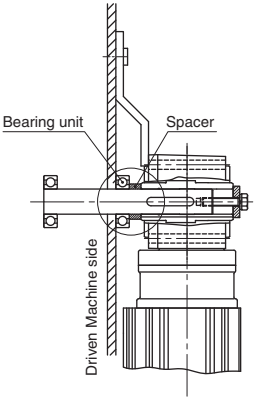

Fig.4 Fixed by end plate

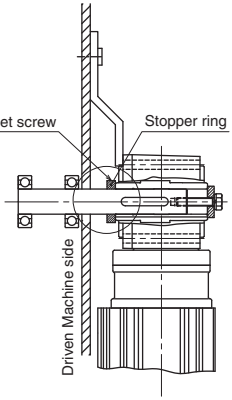

Fig.5 Fixed by set screw and stopper ring

Method to avoid the Drive from slipping reactor to a driven machine. (Fig.6–7)

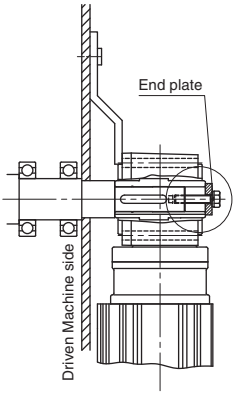

Fig.6 Fixed by spacer

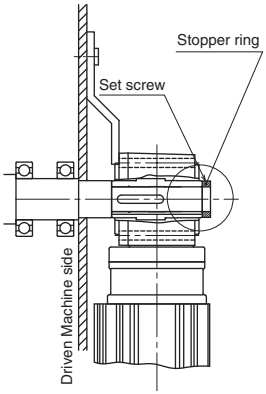

Fig.7 Fixed by set screw

(c–1) How to set a torque arm (03#, 07#, 17#, 1010#)

Mount a torque arm on the driven machine side of the Drive casing. Use hexagon socket head bolts for mounting. (See Table 3 for bolt sizes.)

Torque arm anti-rotation stopper should be designed so as to allow movement of the torque arm to make sure that the contact surface between the Drive and shaft are free from excess force.

Don't fix the torque arm by anti-rotation bolts.

For such applications as requiring frequent start and stop or frequent reversing of the rotating direction, insert a rubber bushing between the torque arm and securing bolt (or spacer) in order to relax impact load.

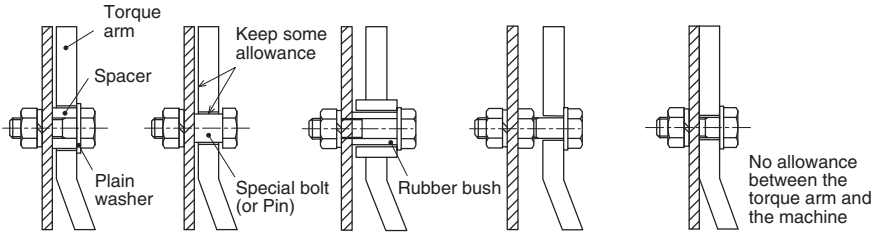

(Adjust the allowance according to the movement of the machine.)

(Excessive force on the whirl stop bolt. machine, and Hyponic may cause damage.)

Good example

Bad example

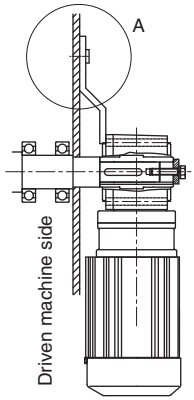

Fig.8 A-part securing methods

Table 3 Size of hexagon socket head bolt

Frame size	Bolt
03#	M5
07#, 17#	M6
1010#	M8

(d–1) How to remove the shaft (03#, 07#, 17#, 1010#)

Make sure that excess force does not act on Drive and shaft.

(a–2) How to set the shaft (20#-64#, 190#-471#, 1110#-1640#)

Apply molybdenum disulfide grease to the surface of a driven shaft and the inner surface of a hollow shaft. Then insert the Drive into the driven shaft.

If the fitting is too tight, lightly knock the end face of a hollow output shaft with a wooden hammer for smooth insertion. Do avoid knocking the casing. We recommend making a jig shown Fig 9. Using this jig, you can insert the Drive smoothly.

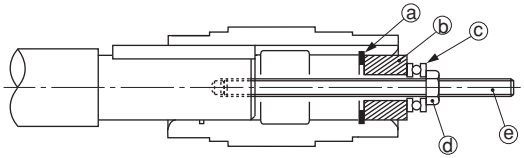

Fig.9 Jig

ⓐ.....plate
ⓑ.....Spacer
ⓒ.....Thrust Bearing
ⓓ.....Nut
ⓔ.....Bolt

The hollow shaft is made according to the tolerances of JIS H8. If you experience impact or notice a large radial load with the hollow shaft, further tighten the fitting between the hollow shaft and the driven shaft, (We recommend JIS js6 or k6 as the tolerance of a driven shaft.)

(b–2) Method to avoid the Drive from slipping away from a driven machine. (Fig.10–12) (20#-64#, 190#-471#, 1110#-1640#)

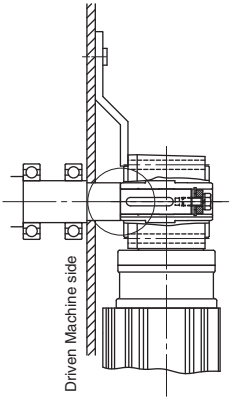

Fig.10 Fixed by spacer and plate

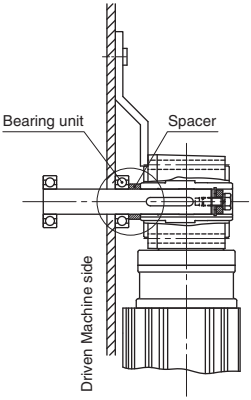

Fig.11 Fixed by end plate

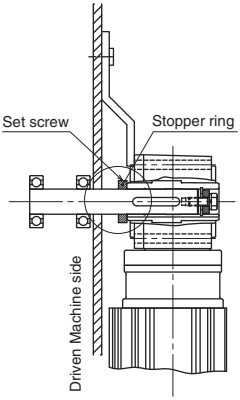

Fig.12 Fixed by set screw and stopper ring

Method to avoid the drive from slipping reactor to a driven machine (Fig.13–15)

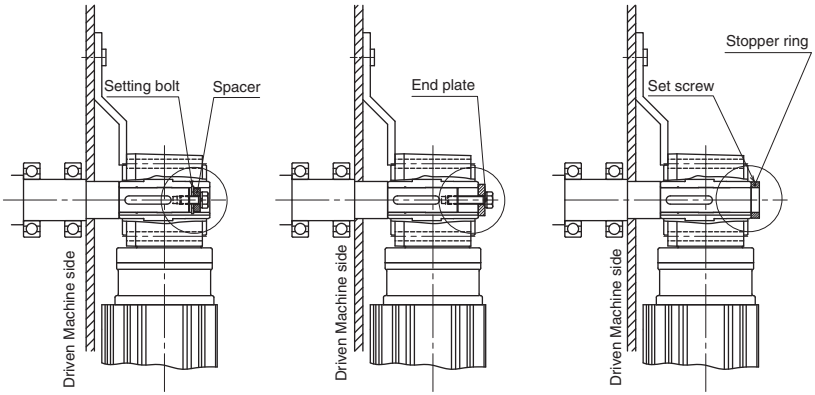

Fig.13 Fixed by stopping shaft Fig.14 Fixed by spacer Fig.15 Fixed by set screw

(c–2) How to set a torque arm (20#-64#, 190#-471#, 1110#-1640#)

Mount a torque arm on the driven machine side of the Drive casing. Use hexagon socket head bolts for mounting. (See Table 4 for bolt sizes.)

Torque arm anti-rotation stopper should be designed so as to allow movement of the torque arm to make sure that the contact surface between the Drive and shaft are free from excess force.

Don't fix the torque arm by anti-rotation bolts.

For such applications as requiring frequent start and stop or frequent reversing of the rotating direction, insert a rubber bushing between the torque arm and securing bolt (or spacer) in order to relax impact load.

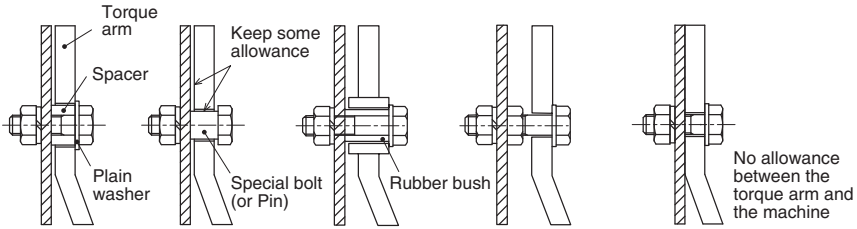

(Adjust the allowance according to the movement of the machine.)

(Excessive force on the whirl stop bolt. machine, and Hyponic may cause damage.)

Good example

Bad example

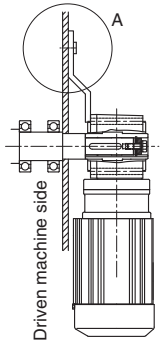

Fig.16 A-part securing methods

Table 4 Size of hexagon socket head bolt

Frame size	Bolt
190#, 1110#, 1120#	M6
20#, 201#, 23#, 231#, 25#, 251#, 271#, 1210#, 1220#, 1230#, 1240#	M8
30#, 301#, 33#, 331#, 35#, 351#, 361#, 371#, 1310#, 1320#, 1330#, 1340#, 1410#, 1510#	M10
40#, 401#, 43#, 431#, 45#, 451#, 461#, 471#, 1420#, 1430#, 1440#, 1520#, 1521#, 1522#, 1634#	M12
50#, 53#, 54#, 55#, 56#, 1530#, 1531#, 1540#	M16
60#, 63#, 64#, 1630#, 1631#, 1632#, 1633#, 1640#	M20

(d–2) How to remove the shaft (20#-64#, 190#-471#, 1110#-1640#)

Make sure that excess force does not act on the Drive and shaft. Using a jig as shown in Fig. 17 will facilitate removal of the shaft.

Parts for setting, securing or removing the shaft should be prepared by the user.

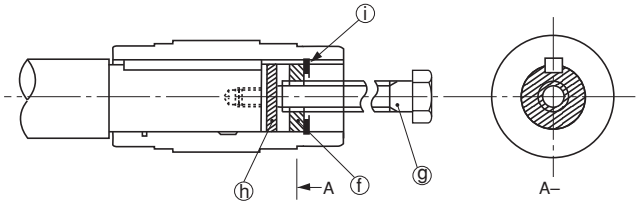

Fig.17 Removing Jig

ⓕ.....Spacer ⓗ.....Plate

ⓖ.....Bolt ⓘ.....Shaft retaining c-ring

(2) Flange and On-bed mounting (optional)

When installing the Drive, pay attention to the alignment between the Drive and shaft to be driven so that the Drive is free from excess force.

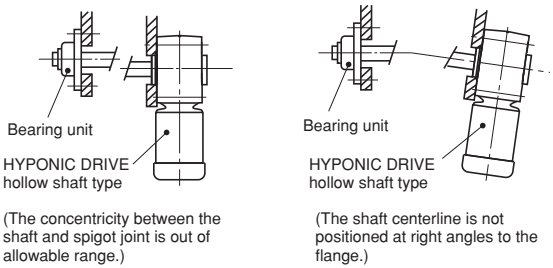

Fig.18 Flange coupling

5. Coupling with Other Machines

⚠ CAUTION

- Confirm the rotation direction before coupling the unit with the driven machine. Incorrect rotation direction may cause personal injury or damage to the equipment.
- When operating the gearmotor alone (uncoupled), remove the key that is temporarily attached to the output shaft; otherwise, personal injury may result.
- Cover the rotating parts; otherwise, personal injury may result.
- When coupling the gearmotor with a load, check that the centering, the belt tension and parallelism of the pulleys are within the specified limits. When the unit is directly coupled with another machine, check that the direct coupling accuracy is within the specified limits. When a belt is used for coupling the unit with another machine, check the belt tension. Correctly tighten bolts on the pulley and coupling before operation; otherwise, personal injury may result because of misalignment.

5–1) Confirming Rotation Direction

Figure 19–21 shows the rotation direction of the output shaft when wires are connected as shown in Fig. 28–32 on page23–33.

Fig.19 Rotation direction of slow speed shaft

Frame size		Reduction ratio	Frame size		Reduction ratio
03#	07#	5, 80, 100, 120, 160, 200, 240	03#	07#	7.5, 10, 12, 15, 20, 25, 30, 40, 50, 60
17#	—	5, 7.5, 10, 12, 80, 100, 120, 150, 200, 240	17#	—	15, 20, 25, 30, 40, 50, 60
190#	—	5	190#	—	7.5, 10, 12, 15, 20, 25, 30, 40, 50, 60
20#	201#	10, 12, 15, 20, 25, 30, 40, 50, 60	20#	201#	80, 100, 120
30#	301#	—	30#	301#	80, 100, 120
40#	401#		40#	401#	
60#	—		60#	—	
50#	—	—	50#	—	80, 100, 120
23#	231#	10, 12, 15, 20, 25, 30	23#	231#	40, 50, 60
33#	331#		33#	331#	
43#	431#		43#	431#	
54#	—		54#	—	
53#	—	10, 12, 15, 20, 25, 30	53#	—	40, 50, 60, 80
25#	251#	—	25#	251#	150, 200, 240
35#	351#		35#	351#	
45#	451#		45#	451#	
55#	—		55#	—	
—	361#	300, 360, 480, 560, 750, 900, 1200, 1440	—	361#	—
—	461#		—	461#	
56#	—		56#	—	
	271#	7.5, 10, 12, 15, 20, 25	—	271#	5, 30
—	371#		—	371#	
—	471#		—	471#	
63#	—	10, 12, 15, 20, 25, 30	63#	—	40, 50
64#	—	10, 12, 15, 20, 25	64#	—	30, 40
1010#	1110#	—	1010#	1110#	5, 7, 10
1210#	1310#		1210#	1310#	
1410#	1510#		1410#	1510#	
1120#	1220#	5, 7, 10, 12, 15, 20, 25, 30, 40, 50, 60	1120#	1220#	—
1320#	1420#		1320#	1420#	
1520#	—		1520#	—	
1521#	—	5, 7, 10, 12, 15, 20, 25	1521#	—	—
1522#	—	5, 7, 10, 12, 15	1522#	—	—
1230#	1330#	—	1230#	1330#	80, 100, 120, 150, 200, 240
1430#	1530#		1430#	1530#	
1531#	—	—	1531#	—	40, 50, 60, 80
1630#	—	—	1630#	—	80, 100, 120
1631#	—	—	1631#	—	150, 200, 240
1632#	—	30	1632#	—	40, 50
1633#	—	20, 25	1633#	—	30, 40
1634#	—	5, 7, 10, 12, 15	1634#	—	20, 25
1240#	1340#	300, 360, 480, 600, 720, 900, 1200, 1440	1240#	1340#	—
1440#	1540#		1440#	1540#	
1640#	—		1640#	—	
RNYM Series		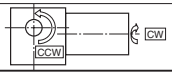	RNYM Series		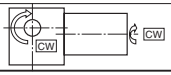

· Change over the SW shown in Fig.29, 30 to reverse the rotation of 15–90W single-phase motors.

· Change the positions of R and T shown in Fig.28, 31 to reverse the rotation of three-phase standard motors.

Fig.20 Rotation direction of slow speed shaft

Frame size				Reduction ratio	Frame size				Reduction ratio
01#	03#	05#	07#	5, 80, 100, 120, 160, 200, 240	01#	03#	05#	07#	7.5, 10, 12, 15, 20, 25, 30, 40, 50, 60
15#	17#	—	—	5, 7.5, 10, 12, 80, 100, 120, 150, 200, 240	15#	17#	—	—	15, 20, 25, 30, 40, 50, 60
190#	—	—	—	5	190#	—	—	—	7.5, 10, 15, 20, 30, 40, 50, 60
20#	—	—	—	10, 15, 20, 25, 30, 40, 50, 60	20#	—	—	—	80, 100, 120
23#	—	—	—	10, 15, 20, 25, 30	23#	—	—	—	40, 50, 60
25#	—	—	—	—	25#	—	—	—	150, 200, 240
270#	—	—	—	5, 7.5, 10, 15, 20	270#	—	—	—	30
30#	—	—	—	—	30#	—	—	—	80, 100, 120
33#	—	—	—	10, 15, 20, 25, 30	33#	—	—	—	40, 50, 60
35#	—	—	—	—	35#	—	—	—	150, 200, 240
36#	—	—	—	300, 360, 480, 560, 750, 900, 1200, 1440	36#	—	—	—	—
370#	—	—	—	5, 7.5, 10, 15, 20	370#	—	—	—	30
40#	—	—	—	—	40#	—	—	—	80, 100, 120
43#	—	—	—	10, 15, 20, 25, 30	43#	—	—	—	40, 50, 60
45#	—	—	—	—	45#	—	—	—	150, 200, 240
46#	—	—	—	300, 360, 480, 560, 750, 900, 1200, 1440	46#	—	—	—	—
470#	—	—	—	5, 7.5, 10, 15, 20	470#	—	—	—	30
50#	—	—	—	—	50#	—	—	—	80, 100, 120
53#	54#	—	—	10, 15, 20, 30	53#	54#	—	—	40, 50, 60, 80
55#	—	—	—	—	55#	—	—	—	150, 200, 240
56#	—	—	—	300, 360, 480, 560, 750, 900, 1200, 1440	56#	—	—	—	—
1630#				—	1630#				80, 100, 120
1631#				—	1631#				150, 200, 240
1240#	1340#	1440#	1540#	300, 360, 480, 600, 720, 900, 1200, 1440	1240#	1340#	1440#	1540#	—
1640#	—	—	—		1640#	—	—	—	
RNFM Series					RNFM Series				

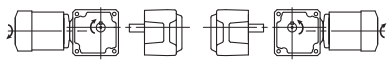

R Type L Type

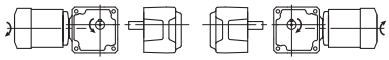

R Type L Type

· Change over the SW shown in Fig.29, 30 to reverse the rotation of 15–90W single-phase motors.

· Change the positions of R and T shown in Fig.28, 31 to reverse the rotation of three-phase standard motors.

Fig.21 Rotation direction of slow speed shaft

Frame size		Reduction ratio	Frame size		Reduction ratio
190#	—	7.5, 10, 15, 20, 30, 40, 50, 60	190#	—	5
20#	—	10, 15, 20, 25, 30, 40, 50, 60	20#	—	80, 100, 120
23#	—	10, 15, 20, 25, 30	23#	—	40, 50, 60
25#	—	—	25#	—	150, 200, 240
270#	—	5, 7.5, 10, 15, 20	270#	—	30
30#	—	—	30#	—	80, 100, 120
33#	—	10, 15, 20, 25, 30	33#	—	40, 50, 60
35#	—	—	35#	—	150, 200, 240
36#	—	300, 360, 480, 560, 750, 900, 1200, 1440	36#	—	—
370#	—	5, 7.5, 10, 15, 20	37#	—	30
40#	—	—	40#	—	80, 100, 120
43#	—	10, 12, 15, 20, 25, 30	43#	—	40, 50, 60
45#	—	—	45#	—	150, 200, 240
46#	—	300, 360, 480, 560, 750, 900, 1200, 1440	46#	—	—
470#	—	5, 7.5, 10, 15, 20	470#	—	30
50#	—	—	50#	—	80, 100, 120
53#	54#	10, 15, 20, 30	53#	54#	40, 50, 60, 80
55#	—	—	55#	—	150, 200, 240
56#	—	300, 360, 480, 560, 750, 900, 1200, 1440	56#	—	—
60#	—	—	60#	—	80, 100, 120
63#	—	10, 15, 20, 30	63#	—	40, 50
64#	—	10, 15, 20	64#	—	30, 40
—	1340#	—	—	1340#	300, 360, 480, 600, 720, 900, 1200, 1440
1440#	1540#		1440#	1540#	

RNHM Series

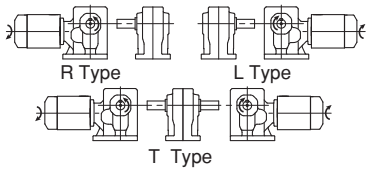

RNHM Series

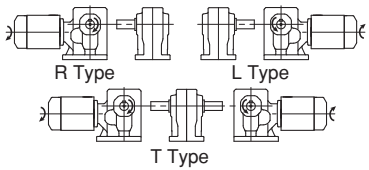

· Change over the SW shown in Fig.29, 30 to reverse the rotation of 15–90W single-phase motors.

· Change the positions of R and T shown in Fig.28, 31 to reverse the rotation of three-phase standard motors.

5–2) Coupling Installation

· When installing a coupling, do not impact or apply excessive thrust load to the shaft; otherwise, the bearing may be damaged.
· Thermal shrinking or end cap screws are recommended for mounting (Fig.22).

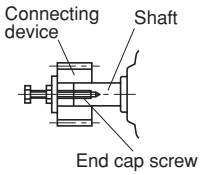

Fig.22

(1) When using a Coupling
The accuracy of the dimensions (A,B,and X) shown in Fig.23 should be within the toleronce shown in Table 5.

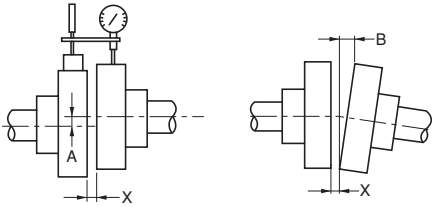

Fig.23

Table 5 Centering accuracy of flexible coupling

A Dimension Tolerance	0.1mm or manufacturer's specification
B Dimension Tolerance	0.1mm or manufacturer's specification
X dimension	manufacturer's specification

(2) When using a Chain Sprocket and Gear
· The chain tension angle should be perpendicular to the shaft.
· Refer to the chain catalog for the chain tension.
· Select sprockets and gears whose pitch diameter are three times the shaft diameter or greater.
· Install sprocket and gears so that their point of load application will be closer to the gearmotor side with respect to the length of the shaft. (Fig.24)

(3) When using a V-belt
· Excessive V-belt tension will damage the shaft and bearing. Refer to the V-belt catalog for proper tension.
· The parallelism and eccentricity (ß) between two pulleys should be within 20'. (Fig25)
· Use a matched set with the same circumferential length when more than one belt is to be installed.

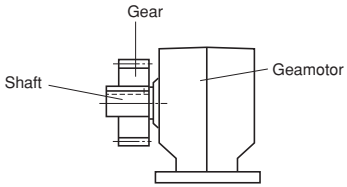

Fig.24

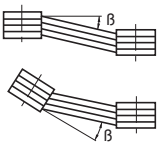

Fig.25

6. Wiring

■ Wiring for SUMITOMO standard 3-phase motor is shown below. Refer to the respective instruction manual when using another manufacturer,s motor.

⚠ DANGER

- Do not handle the unit when cables are live. Be sure to turn off the power; otherwise, electric shock may result.
- Connect a power cable to the unit according to the connection diagram shown inside the terminal box or in the maintenance manual; otherwise, electric shock or fire may result.
- Do not forcibly curve, pull, or clamp the power cable and lead wires; otherwise, electric shock or fire may result.
- Correctly ground the grounding bolt; otherwise, electric shock may result.
- The lead-in condition of an explosion-proof type motor shall conform to the facility's electrical codes extension regulations, and explosion-proofing guide, as well as the maintenance manual; otherwise, explosion, electric shock, personal injury, fire or damage to the equipment may result.
- Do not wet by water for electrical parts like cable connector, rectifier or condenser, even for water-proof type.

⚠ CAUTION

- When wiring, follow the facility's electrical codes and extension regulations; otherwise, burning, electric shock, injury, or fire may result.
- The motor is not equipped with a protective device. However, it is compulsory to install an overload protector according to facility electrical codes. It is recommended to install other protective devices (earth leakage breaker, etc.), in addition to an overload protector, in order to prevent burning, electric shock, personal injury, and fire.
- Connecting method is shown below. Insulats the connecting point using insulating tape.

- Never touch the terminals when measuring insulation resistance; otherwise, electric shock may result.
- When measuring the insulation resistance of an explosion-proof type motor, confirm that there is no gas, steam, or other explosive substance in the vicinity, in order to prevent possible explosion or ignition.
- When using a 400V-class inverter to drive the motor, mount a suppresser filter or reactor on the inverter side, or provide reinforced insulation on the motor side; otherwise, dielectric breakdown may couse fire or damage to the equipment.
- For brakemotors, install a rectifier in a place where the temperature is 60°C or below; if the ambient temperarure exceeds 60°C, be sure to use a cover for protection.
- For single-phase motors, exercise care so as not to mistake the starting capacitor for the operation capacitor. The starting capacitor if will be broken used for operation.
- For single-phase motors, exercise care so as not to damage the vinyl cover of the starting capacitor, otherwise electric shock may result.
- Do not open water-proof dust-proof box for water-proof type, other wise electrical shock, fire or damage to the equipment, may result.

Fig.26

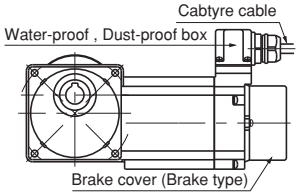

- For brake motors, do not electrify a brake coil continuously when a motor is stopping; otherwise, a brake coil may burn and fire may result.

· Long cables cause voltage to drop. Select cables with appropriate diameter so that the voltage drop will be less than 2%.
· After wiring outdoor and explosion-proof type motors, check that terminal box mounting bolts are not loose, and correctly attach the terminal box cover.

6–1) Attaching/Detaching The Terminal Box Cover (0.1–0.4kW 3-phase motor)

(1) Detaching

As shown in Fig. 27, hold both sides of the terminal box and pull it towards you. The cover will detach.

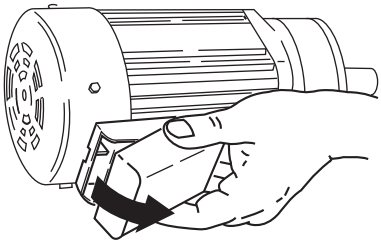

Fig.27

(2) Attaching

Press the terminal box cover to the terminal box case until it snaps into place.

6–2) Measuring Insulation Resistance

· When measuring the insulation resistance, disconnect the motor from the control panel. Check the motor separately.

Measure the insulation resistance before wiring. The insulation resistance (R) varies according to the motor output, voltage, type of insulation, coil temperature, humidity, dirt, period of operation, test electrification time, etc. Usually, the insulation resistance exceeds the values shown in Table 6.

Table 6 Insulation resistance

Megohmmeter voltage	Insulation resistance (R)
500V	1M(Ω) or more

Reference: The following equations are shown in JEC–2100.

$$R\ (> \text{ or } =)\ \frac{\text{Rated voltaga (V)}}{\text{Rated output (kW)}+1000}\ (\text{M}\Omega)$$

$$R\ (> \text{ or } =)\ \frac{\text{Rated voltaga (V)} + \text{Speed (rpm)}/3}{\text{Rated output (kW)} + 2000} + 0.5\ (\text{M}\Omega)$$

A drop in insulation resistance may be attributed to poor insulation. In that case, do not turn on the power. Contact our nearest agent, distributor, or sales office.

6–3) Protection Coordination

(1) Use a molded case circuit breaker for protection against short circuit.
(2) Use an overload protection device that protects the unit against asurge of electric current exceeding that shown on the rating plate.
(3) For an explosion-proof type motor , use an overload protector that can protect the unit within the allowable binding hour by means of the locked rotor current shown on the rating plate.

6–4) Single-Phase Motor Condenser Specification

Table 7 15–90W Single-Phase Motor Condenser Specification

Motor voltage	Condenser Voltage Ressistance	Motor type	Motor capacity (W)	Frame Size	Condenser capacity (μ F)
100V	220V	Induction	15	01#, 03#	5
			25	01#, 03#	7
			40	05#, 07#	12
			40	17#, 1240#	14
			60	17#, 1240#	18
			90	15#, 17#, 1240#	25
		Reversible	15	01#, 03#	6
			25	01#, 03#	10
			40	05#, 07#	14
			40	17#, 1240#	16
			60	17#, 1240#	22
			90	15#, 17#, 1240#	32
200V	440V	Induction	40	17#, 1240#	3.5
			60	17#, 1240#	4.5
			90	15#, 17#, 1240#	6.5
		Reversible	40	17#, 1240#	4
			60	17#, 1240#	5.5
			90	15#, 17#, 1240#	8

Table 8-a 0.1-0.4kW Capacitor start and run type Signle Phase Motor Condenser Specification

Motor voltage	Motor capacity (W)	For starting		For operation	
		Condenser capacity(μ F)	Condenser Voltage Resistance (V)	Condenser capacity(μ F)	Condenser Voltage Resistance (V)
100V/200V	0.1	60	125	10	230
	0.2	100	125	30	230
	0.4	200	125	40	230
	0.75	350	125	40	230

Table 8-b 0.1,0.2kW Capacitor run type Single Phase Motor Condenser Specification

Motor voltage	Motor capacity(W)	Condenser capacity(μ F)	Condenser Voltage Resistance (V)
100V	0.1	25	220
	0.2	47	250
200V	0.1	7	450
	0.2	12	

6–5) Three-Phase Motor·Single-Phase Motor (without brake) Connection

Fig. 28 shows the three-phase motor (without brake) connection and the standard specifications for terminal codes.

Fig. 28-a Three-phase motor connection and terminal code.(15W~7.5kW)

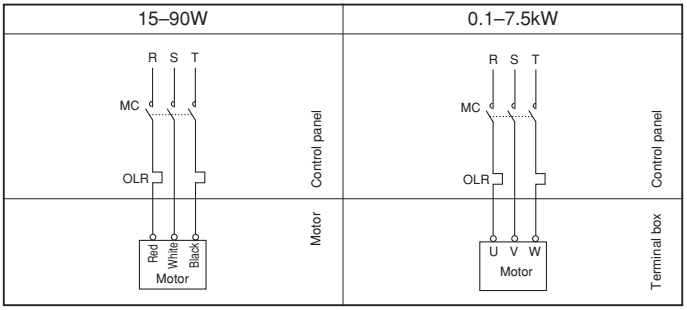

Fig. 28-b Three-phase motor connection and terminal code.(11kW)

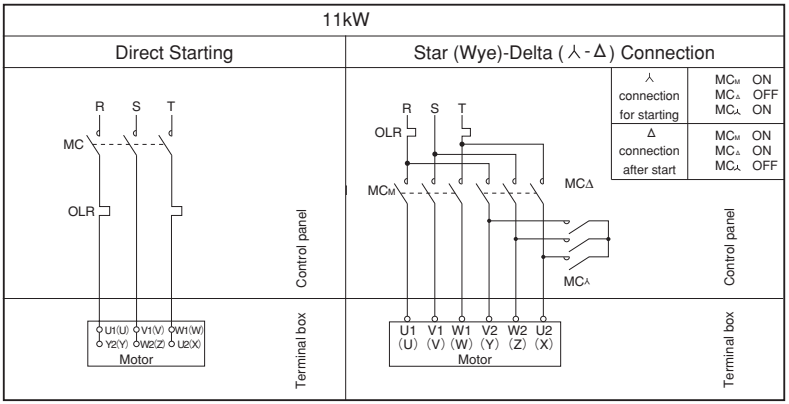

Fig. 29 shows the single-phase motor (without brake) connection and the standard specifications for terminal codes.

Fig. 29-a Single-phase motor connection and terminal code.

	100V	
	Capacitor run type15W~90W	Capacitor start and Capacitor-run type 0.1kW~0.4kW
Operation in one direction	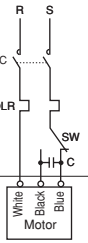 Control panel / Motor	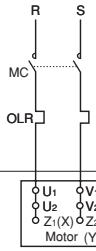 Control panel / Terminal box
Operating in both directions	Note 1 : Turn the switch SW to change the current to the opposite direction. When instant switching is required, use a reversible motor. Note 2 : Capacitor attached to the motor must be connected. (See Table 7 on page 23 for the capacitor)	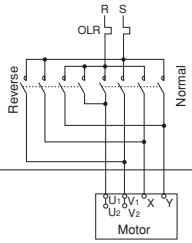 Control panel / Terminal box

Note: When operating in the reversed direction, exchange X and Y in the above diagrams.

MC: Electromagnetic contactor
OLR: Overload relay or thermal relay
SW: Rotation shifting switch
} These should be furnished by the customer

C: Condenser ———— Accessory

- For 15W–90W capacitor run type, connect the accessory capacitor. (See Table 7 on page 23 for the capacitor.)
- Do not open water-proof dust-proof box for water-proof type , other wise electrical shock, fire or damage to the equipment may result.
- Rectifier, Condenser are not water-proofed. for water-proof type .

Fig. 29 shows the single-phase motor (without brake) connection and the standard specifications for terminal codes.

Fig. 29 Single-phase motor connection and terminal code.

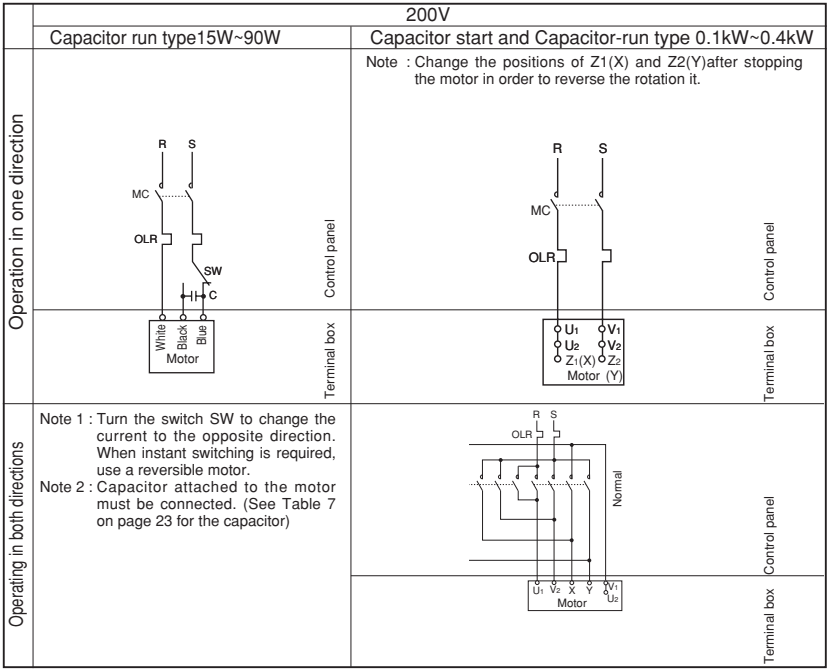

Note: When operating in the reversed direction, exchange X and Y in the above diagrams.

MC: Electromagnetic contactor
OLR: Overload relay or thermal relay
SW: Rotation shifting switch
These should be furnished by the customer

C: Condenser ——— Accessory

- For 15W–90W capacitor run type , connect the accessory capacitor. (See Table 7 on page 23 for the capacitor.)
- Do not open water-proof dust-proof box for water-proof type , other wise electrical shock, fire or damage to the equipment may result.
- Rectifier, Condenser are not water-proofed. for water-proof type .

6–6) Three-Phase Motor·Single-Phase Motor With Brake

Fig. 30 shows the single-phase motor with brake connection and the standard specifications for terminal code.

(1) Single-phase motor with FB-brake

Fig.30-a-1 Connections when operating in one direction (15W~90W, Capacitor run type)

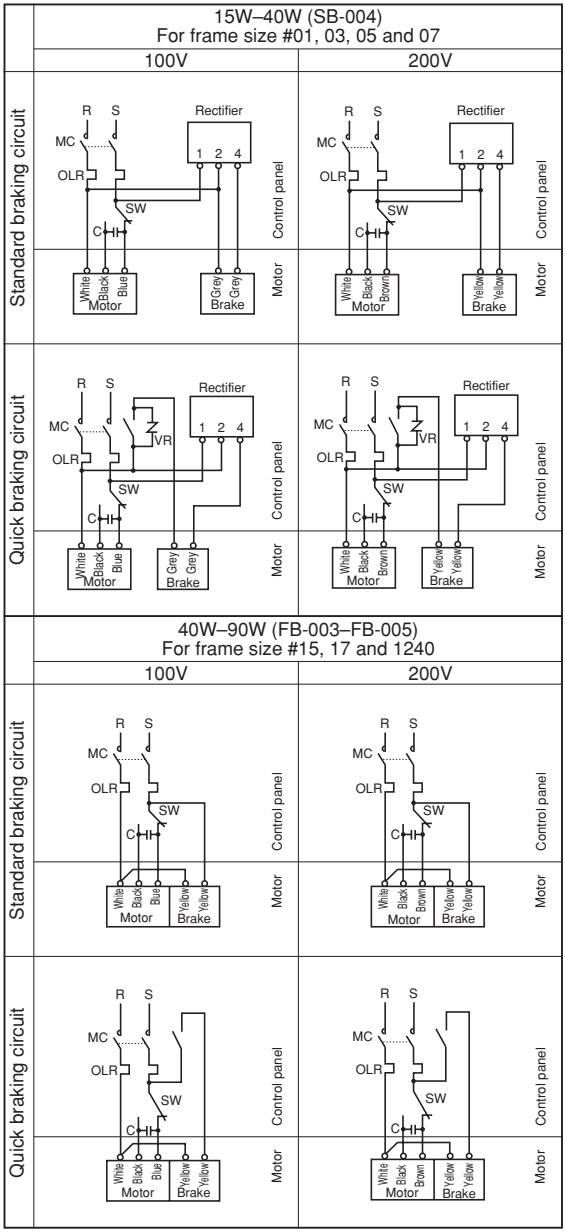

Note 1: A rectifier is supplied separately for motors of 15-40W for frame size #01, 03, 05 and 07.

Note 2: A rectifier is built in the brake of motors of 40-90W for frame size #15, 17 and 1240. (FB-003-005)

Note 3: Turn the switch SW to change the current of 15-90W motors to the opposite direction. When instant switching is required, use a reversible motor.

MC: Electromagnetic contactor, OLR: Overload relay (thermal relay), SW: switch, VR: varistor and C: capacitor are not supplied by Sumitomo.

Note 4: Condenser
Please conect the condenser attached with product.

Capacity of varistor (VR)

Input power	AC100V, 200V
Rated voltage of varistor	AC260V–300V
Voltage of varistor	430V–470V
Rated capacity of motor	0.2Watt or more

Varistar is optionally available at Sumitomo.

- When greater stopping accuracy is desired for lifter units, etc., use the quick braking circuit.
- For the contact capacity of the emergency braking circuit, we recommend the DC braking capacity (for DC coil load) that is more than five times the braking current.

Fig.30-a-2 Connections when operating in one direction (0.1–0.4kW capacitor start and run type)

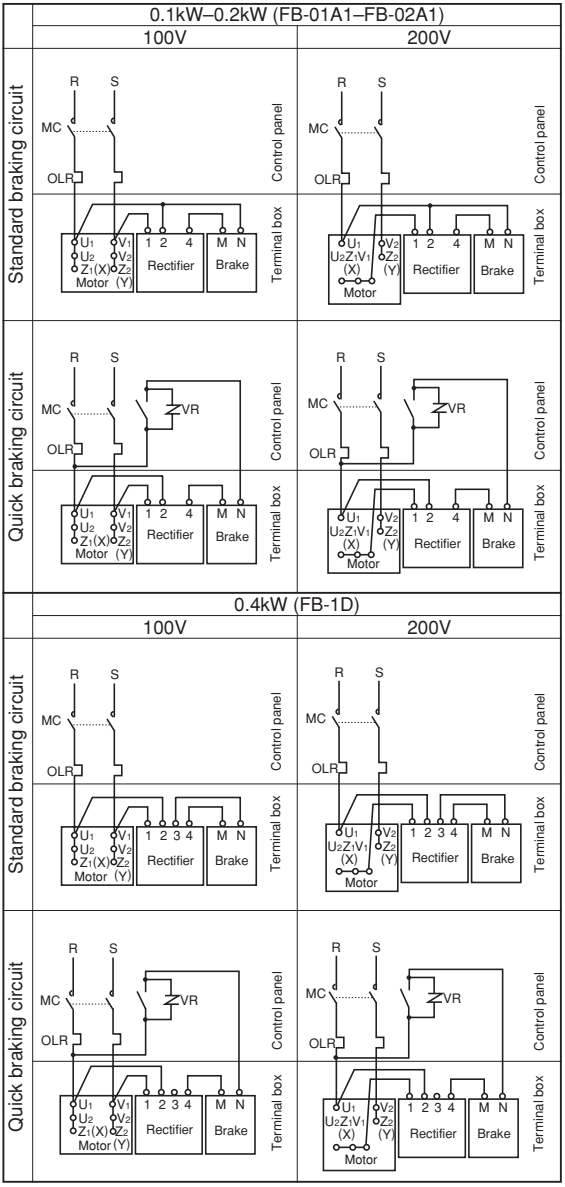

Note: When reverse 0.1-0.4kW motor, change the positions of Z_1(X)to Z_2(Y) after the motor has stopped.

MC: Electromagnetic contactor, OLR: Overload relay (thermal relay), VR: varistor are not supplied by Sumitomo.

Capacity of varistor (VR)

Input power		AC100V, 200V
Rated voltage of varistor		AC260V–300V
Voltage of varistor		430V–470V
Rated capacity of varistor	FB-01A1, 02A1	0.2Watt or more
	FB-1D	0.4Watt or more

Varistar is optionally available at Sumitomo.

- When greater stopping accuracy is desired for lifter units, etc., use the quick braking circuit.
- For the contact capacity of the emergency braking circuit, we recommend the DC braking capacity (for DC coil load) that is more than five times the braking current.

Fig.30–b–1 Connections when operating in both directions (0.1–0.4kW capacitor start and run type)

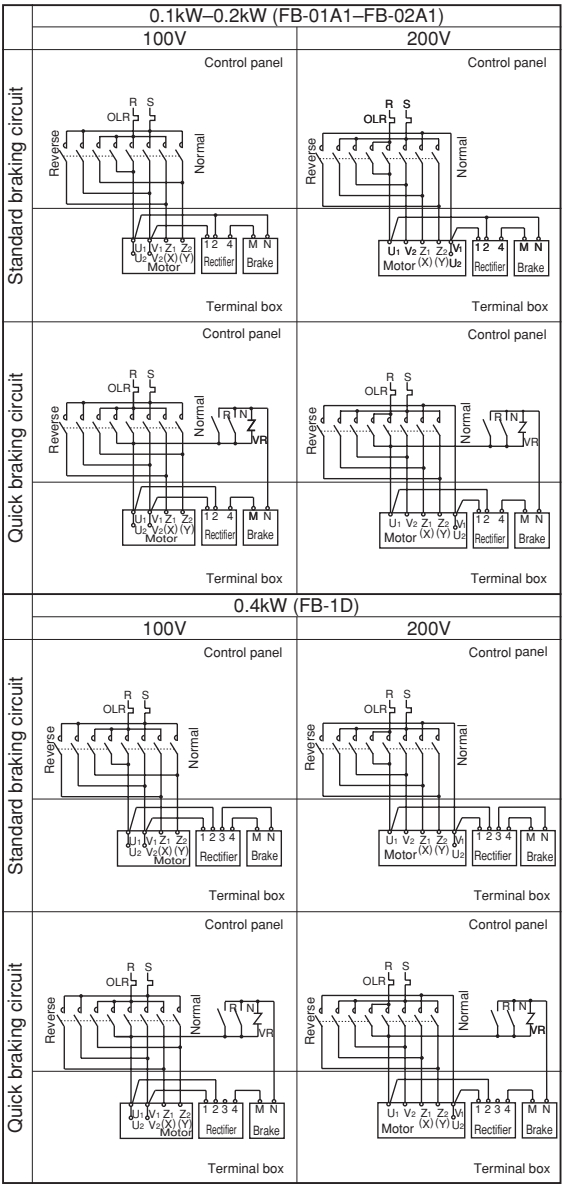

- Reversible electromagnetic contactor and OLR: Overload relay are not supplied by Sumitomo. VR: varistor is optionally available at Sumitomo.

Fig.31-a Shows the Three-phase motor with brake connection and the standard specifications for terminal code.

(2) Three-phase motor with FB brake

Fig.31–a Connections when operating in one direction

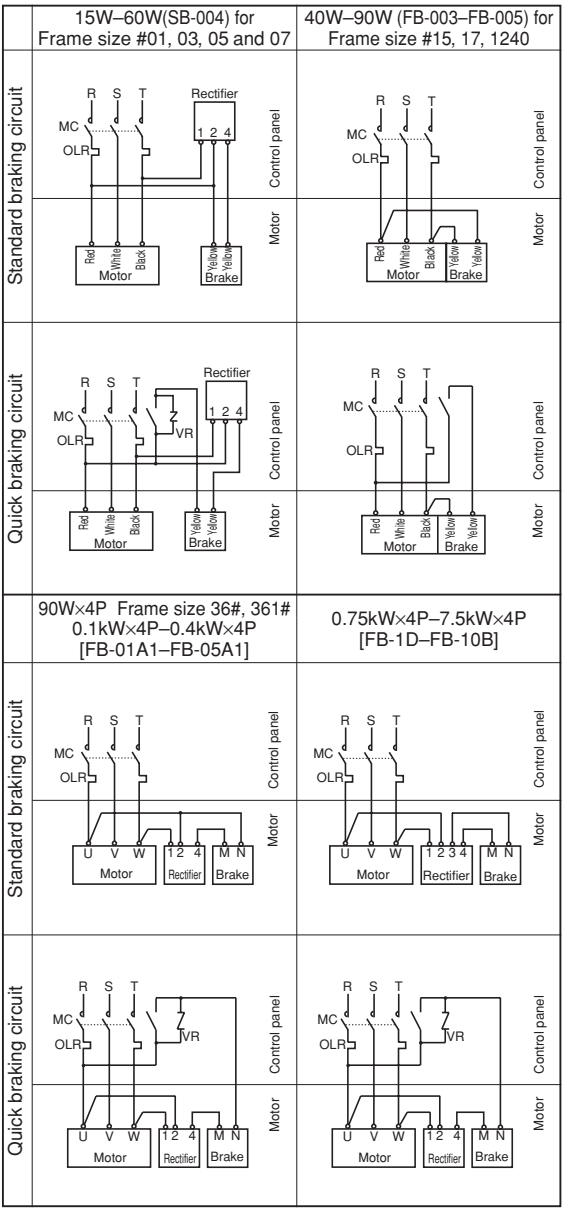

Note 1: A rectifier is supplied separately for 15–40W motors tor frame size #01, 03, 05 and 07.

Note 2: A rectifier is built in the brake of 40–90W motors for frame size #15, 17 and 1240. (FB-003-005)

MC: Electromagnetic contactor and OLR: Overload relay are not supplied by Sumitomo.
VR: varistor is optionally available at Sumitomo.

Capacity of varistor (VR)

aBrake input power		AC200V–230V	AC380V–460V
Rated voltage of varistor		AC260V–300V	AC510V
Varistor voltage		430V–470V	820V
Rated capacity of varistor	SB-004, FB-01A1, 02A1, 05A1	0.2Watt or more	0.4Watt or more
	FB-1D	0.4Watt or more	0.6Watt or more
	FB-2D, 3D, 5B, 8B	0.6Watt or more	1.5Watt or more
	FB-10B, 15B	1.0Watt or more	1.5Watt or more

Varistar is optionally available at Sumitomo.

- When greater stopping accuracy is desired for lifter units, etc., use the quick braking circuit.
- For the contact capacity of the emergency braking circuit, we recommend the DC braking capacity (for DC coil load) that is more than five times the braking current.

Fig.31-b Shows the Three-phase motor with brake connection and the standard specifications for terminal code.

(2) Three-phase motor with FB brake

Fig.31–b Connections when operating in one direction

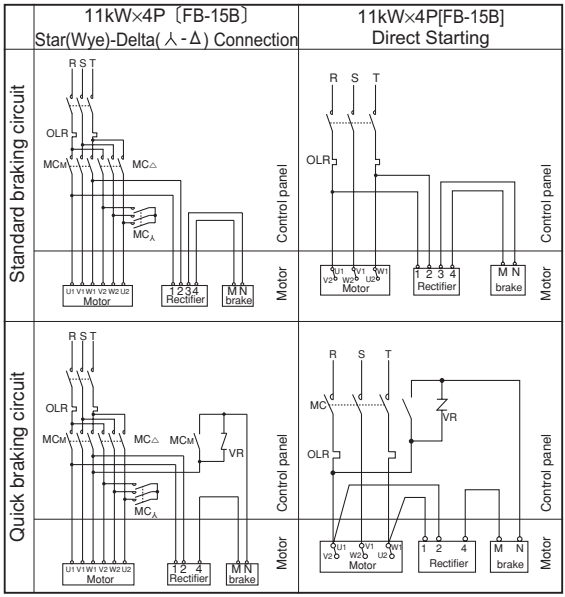

MC: Electromagnetic contactor and OLR: Overload relay are not supplied by Sumitomo.
VR: varistor is optionally available at Sumitomo.

Capacity of varistor (VR)

aBrake input power		AC200V–230V	AC380V–460V
Rated voltage of varistor		AC260V–300V	AC510V
Varistor voltage		430V–470V	820V
Rated capacity of varistor	SB-004, FB-01A1, 02A1, 05A1	0.2Watt or more	0.4Watt or more
	FB-1D	0.4Watt or more	0.6Watt or more
	FB-2D, 3D, 5B, 8B	0.6Watt or more	1.5Watt or more
	FB-10B, 15B	1.0Watt or more	1.5Watt or more

Varistar is optionally available at Sumitomo.

- When greater stopping accuracy is desired for lifter units, etc., use the quick braking circuit.
- For the contact capacity of the emergency braking circuit, we recommend the DC braking capacity (for DC coil load) that is more than five times the braking current.

Fig.31–c Connections when operating in both directions

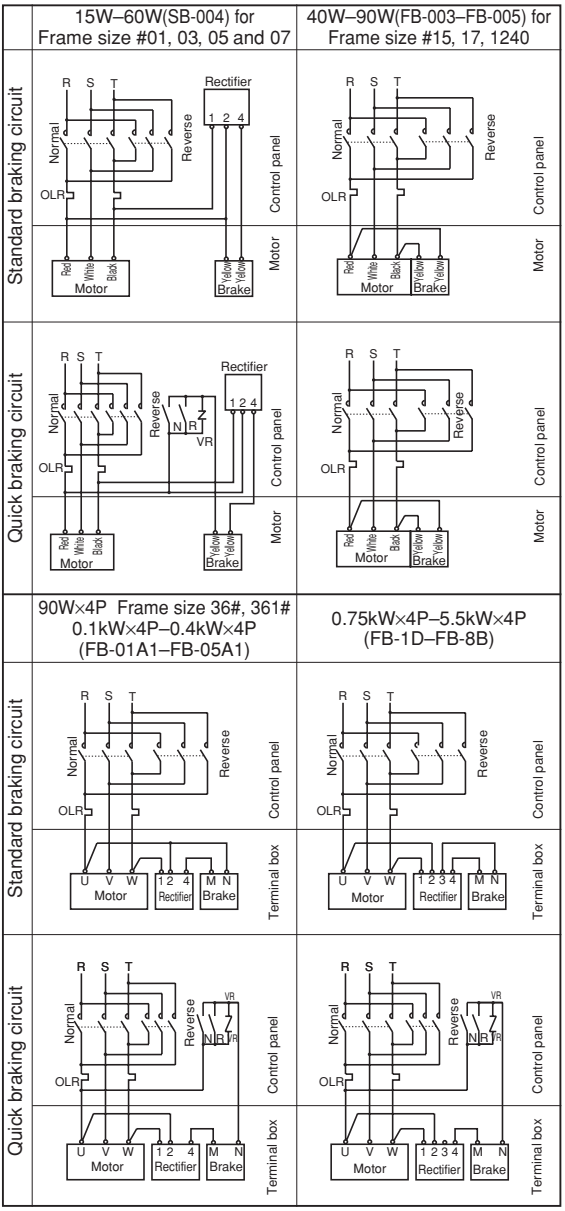

MC: Electromagnetic contactor and OLR: Overload relay are not supplied by Sumitomo.
VR: varistor is optionally available at Sumitomo.

Capacity of varistor (VR)

aBrake input power		AC200V–230V	AC380V–460V
Rated voltage of varistor		AC260V–300V	AC510V
Varistor voltage		430V–470V	820V
Rated capacity of varistor	SB-004, FB-01A1, 02A1, 05A1	0.2Watt or more	0.4Watt or more
	FB-1D	0.4Watt or more	0.6Watt or more
	FB-2D, 3D, 5B, 8B	0.6Watt or more	1.5Watt or more
	FB-10B, 15B	1.0Watt or more	1.5Watt or more

Varistar is optionally available at Sumitomo.

- When greater stopping accuracy is desired for lifter units, etc., use the quick braking circuit.
- For the contact capacity of the emergency braking circuit, we recommend the DC braking capacity (for DC coil load) that is more than five times the braking current.

Fig.31–d Connections when operating in both directions

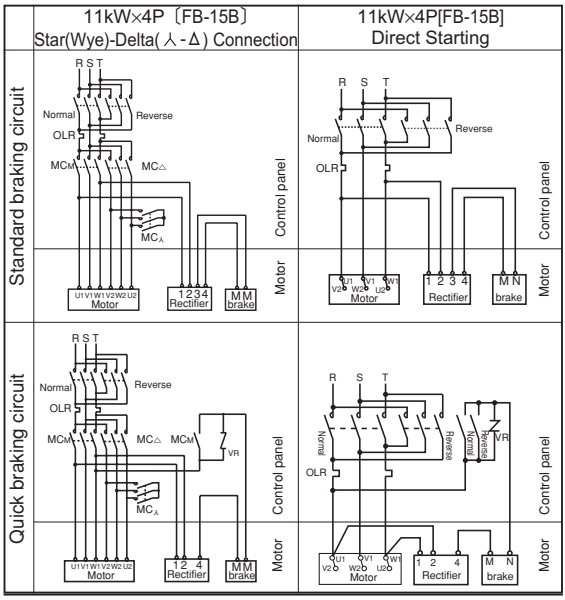

MC: Electromagnetic contactor and OLR: Overload relay are not supplied by Sumitomo.
VR: varistor is optionally available at Sumitomo.

Capacity of varistor (VR)

aBrake input power		AC200V–230V	AC380V–460V
Rated voltage of varistor		AC260V–300V	AC510V
Varistor voltage		430V–470V	820V
Rated capacity of varistor	SB-004, FB-01A1, 02A1, 05A1	0.2Watt or more	0.4Watt or more
	FB-1D	0.4Watt or more	0.6Watt or more
	FB-2D, 3D, 5B, 8B	0.6Watt or more	1.5Watt or more
	FB-10B, 15B	1.0Watt or more	1.5Watt or more

Varistar is optionally available at Sumitomo.

- When greater stopping accuracy is desired for lifter units, etc., use the quick braking circuit.
- For the contact capacity of the emergency braking circuit, we recommend the DC braking capacity (for DC coil load) that is more than five times the braking current.

Fig.32-a Shows the inverter motor connection and the standard specifications for terminal code.

Fig.32-a Connections when operating a brake motor by an inverter

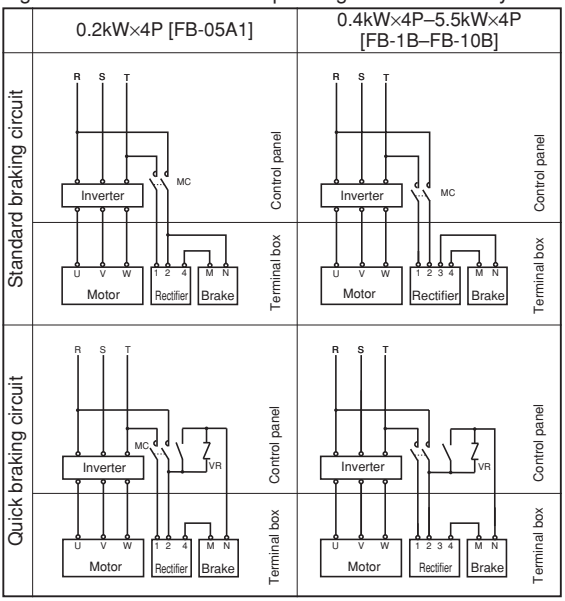

Note 1: Refer to instruction manuals and guide manual of inverter for interlocking with inverter required in MC ON/OFF.

Note 2: Connection capacity for quick braking circuit is recommended to have more than five times of braking capacity (direct current coil load) of the brake current.

- MC: Electromagnetic contactor
- VR: varistor is optionally available at Sumitomo.

Fig.32-b Connections when operating a brake motor by an inverter

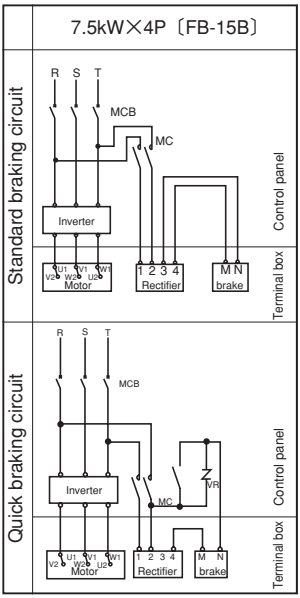

Table 9 Varistor (VR) Capacity

Motor power			AC200V–230V	AC380V–460V
Rated voltage of varistor			AC260V–AC300V	AC510V
Varistor voltage			430V–470V	820V
Rated power of varistor	Brake type	SB-004, FB-01A1, 02A1, 05A1, 01A, 02A, 05A	0.2Watt or more	0.4Watt or more
		FB-1D	0.4Watt or more	0.6Watt or more
		FB-2D, 3D, 5B, 8B	0.6Watt or more	1.5Watt or more
		FB-10B, 15B	1.0Watt or more	1.5Watt or more

· The brake delay time of the normal braking action is different from that of the fast braking action. Table 1 on page 6 shows the delay time. Use a circuit that meets your requirements.
· DC braking capacity (for DC coil loading) exceeding 5 times the braking current shown on the name plate is recommended for the fast braking action.

· Use fast braking action for lifting devices or for better stopping accuracy.
· Use fast braking action when a leading capacitor is used.

· For 15W–90W single-phase capacitor run type motor, connect the accessory capacitor, (see Table 7 on page 23 for the capacitor.)

· Pay attention to the following items when driving an inverter.

· For the inverter-driven motor with a brake, use the primary-side power supply for braking as shown in Fig.32, and synchronize the braking operation with the ON/OFF operation of the unit.
· For the inverter-driven motor with a brake, interlocking with the inverter is necessary to engage/release the MC. Refer to the inverter maintenance manual or guide.

7. Operation

⚠ DANGER

- Do not approach or touch rotating parts (output shaft, etc.) during operation; loose clothing may become caught in these rotating parts and cause serious injury or death.
- When the power supply is interrupted, be sure to turn off the power switch. Unexpected resumption of power may cause electric shock, personal injury, or damage to the equipment.
- Do not operate the unit with the terminal box cover removed. Return the terminal box cover to the original position after maintenance in order to electric shock.
- Do not open the terminal box cover when power is supplied to an explosion-proof type motor prevent otherwise, explosion, ignition, electric shock, personal injury, fire, or damage to the equipment may result.
- For motors equipped with brakes, do not operate with brakes released by the manual loosening bolt, otherwise the motor may fall or go out of control.
- Do not use of single-phase motor if there is possibility of loaded more than motor rated torque, otherwise the motor may go out of control.

⚠ CAUTION

- Do not put fingers or foreign objects into the opening of the gearmotor otherwise electric shock, personal injury, fire, or damage to the equipment may result.
- The gearmotor becomes very hot during operation. Do not touch or come in contact with the unit; otherwise, burns may result.
- If any abnormality occurs during operation, stop operation immediately; otherwise, electric shock, personal injury, or fire may result.
- Do not operate the unit in excess of the rating; otherwise, personal injury or damage to the equipment may result.
- Do not touch the charging portion of the starting capacitor of a single-phase motor until the capacitor has discharged completely, otherwise electric shock may result.
- When reversing the rotation of a single-phase motor other than a reversible motor, be sure to stop the motor before reversing the rotation, otherwise the rotation may not be successfully reversed, and the motor may go out of control.

After the unit is installed and properly wired, check the following before operating.

(1) Is the wiring correct ?
(2) Is the unit properly coupled with the driven ?
(3) Are foundation bolts tightened firmly ?
(4) Is the direction of rotation as required ?

After confirming these items, conduct initial break-in without a load; then gradually apply a load. Check the items shown in Table 10 on page 37.

Table 10 Items to check during initial start - up and break - in period

Is abnormal sound or vibration generated ?	(1) Is the housing deformed because the installation surface is not flat ? (2) Is insufficient rigidity of the installation base generating excessive noise ? (3) Is the shaft center aligned with the driven machine ? (4) Is the vibration of the driven machine transmitted to the gearmotor ?
Is the surface temperature of the gearmotor or reducer abnormally high ?	(1) Is the voltage rise or drop substantial ? (2) Is the ambient temperature too high ? (3) Does the current flowing to the gearmotor exceed the rated current shown on the rating plate ?

If any abnormality is found, stop operation and contact our nearest agent, distributor, or sales office.

8. Daily Inspection and Maintenance

⚠ DANGER

- Do not handle the unit when cables are live. Be sure to turn off the power; otherwise, electric shock may result.
- Do not approach or touch any rotating parts (output shaft, etc.) during maintenance or inspection of the unit; loose clothing may become caught in these rotating parts and cause serious injury or death.
- Customers shall not disassemble or modify explosion-proof type motors ; otherwise, explosion, ignition, electric shock, or damage to the equipment may result.
- The lead-in condition of an explosion-proof type motor shall conform to the facilities electrical codes, extension regulations and explosion-proofing guide, as well as the maintenance manual; otherwise, explosion, ignition, electric shock, or damage to the equipment may result.

⚠ CAUTION

- Do not put fingers or foreign objects into the opening of the gearmotor otherwise, electric shock, personal injury, fire, or damage to the equipment may result.
- The gearmotor becomes very hot during operation. Touching the unit with bare hands may result in serious burns.
- Do not touch the terminal when measuring insulation resistance; otherwise, electric shock may result.
- Promptly identify and correct, according to instructions in this manual, any abnormalities observed during operation. Do not operate until abnormality is corrected.
- Do not use damaged gearmotors; otherwise, personal injury, fire, or damage to the equipment may result.
- We can not assume any responsibility for damage or injury resulting from an unauthorized modification by a customer.
- Dispose gearmotor, lubricant as general industrial waste.
- When measuring the insulation resistance of an explosion-proof type motor , confirm that there is no gas, steam, or other explosive substance around the unit in order to prevent, explosion or ignition.

· The gear section is filled with long-life grease that allows it to operate for extended periods without replenishment. However, overhaul the gear section every 20,000 hours or 3 to 5 years to ensure long service life.
· Oil seal life depends on operation condition. It can be needed to replace within 20,000 hrs or 3years.
· Overhauling the gearmotor or reducer reguires specific skills. Be sure to use a workshop specified by Sumitomo for overhaul.

To ensure proper and continued optimum operation, use Table 11 to perform daily inspections.

Table 11 Daily Inspection

Inspection item	Details of inspection
Electric current	Is the current below the rated current shown on the rating plate ?
Noise	Is there abnormal sound ? Is there sudden change in sound ?
Vibration	Is there excessive vibration ? Does vibration change suddenly ?
Surface temperature	Is the surface temperature abnormally high ? Does the surface temperature rise suddenly ? (The temperature rise during operation differs according to the model. When the difference between the temperature of the gear surface and the ambient temperature is approx. 40°C degrees, there will be no problem if there is no fluctuation.)
Grease leakage	Does oil or grease leak from the gear section ?
Foundation bolt	Are foundation bolts loose ?
Chain and V-belt	Are chain and V-belt loose ?
Brake O B	Is the brake lining abraded ? (After operation for an extended period of time, the brake lining becomes abraded. Check the brake gap occasionally, following instructions in section 9, Brake Inspection / Maintenance (p.40-48).)

When any abnormality is found during the daily inspection, take corrective measures according to Section 10, Troubleshooting (pages 50 and 51.) If the abnormality cannot be eliminated, contact our nearest agent, distributor, or sales office.

9. Brake Maintenance

■ This section discusses the operation and maintenance of the sumitomo brake. (When using another manufacturer's brake, please refer to their maintenance manual.)

■ Refer to Brake operation manual (Cat.No.MM0202E) for FB-01A1, 02A1, 05A1, 01A, 02A, 05A, 1D, 2D, 3D, 5B and 8B outdoor type.

⚠ DANGER

- Do not handle the unit when cables are live. Be sure to turn off the power; otherwise, electric shock may result.
- When the motor is used for lifting, do not release the brake while a load is lifted, otherwise the load may fall, leading to an accident.
- Do not operate the motor with the brake released by the manual loosening bolt, otherwise the motor may fall or go out of control.
- Turn on and off the power to check the braking operation before starting the motor, otherwise the motor may fall or go out of control.
- Do not allow water or grease to collect on the brake, otherwise the motor may fall or go out of control due to a drop in the brake torque.

⚠ CAUTION

- After inspection and/or adjustment of the gap, do not operate the motor without replacing the fan cover; otherwise loose clothing may become caught in rotating parts and cause serious injury.
- Replacing the brake lining reguires specific skills. Be sure to use a workshop specified by sumitomo for brake replacement.

· The mechanical life of the FB brake is 2,000,000 times, but periodically check the brake gap G. After use for an extended period of time, the brake lining will be abraded, making it impossible to release the brake. When the brake is used for more than 2,000,000 times, the motor may fall or go out of control because of the abrasion or breakage of mechanical parts.

9–1) Construction and Operation

Figs. 33–42 show the construction of the brake. A spring is used for braking operation (nonexcitation operation type).

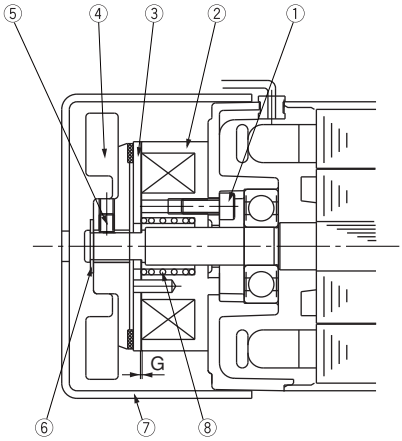

Fig.33 SB–004

No.	Part name
1	Brake restraining bolt
2	Stationary
3	Armature plate
4	Lining with fan
5	Setting bolt
6	Retaning ring
7	Cover
8	Torque spring

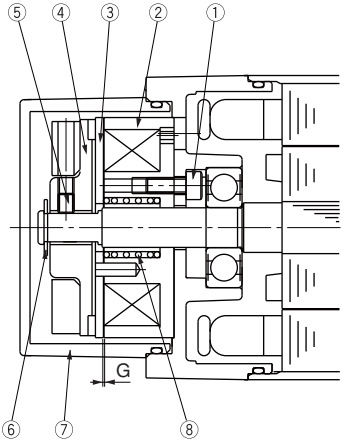

Fig.34 SB–004
(water-proof type)

No.	Part name
1	Brake restraining bolt
2	Stationary
3	Armature plate
4	Lining with fan
5	Setting bolt
6	Retaning ring
7	Cover
8	Torque spring

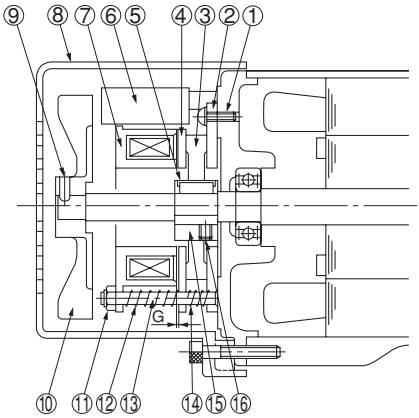

Fig.35 FB-003, 005

No.	Part name
1	Brake restraining bolt
2	Fixed plate
3	Brake lining
4	Armature core
5	Leaf spring
6	Rectifier
7	Stationary
8	Cover
9	Fan set bolt
10	Fan (provided for single-phase 60,90W)
11	Gap adjusting nut
12	Torque spring
13	Stud bolt
14	Sub spring
15	Boss
16	Boss setting bolt

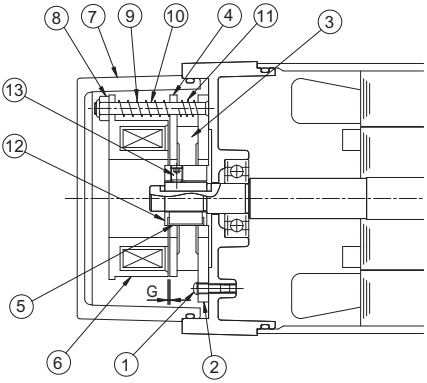

Fig.36 FB-003, 005 (Water-proof type)

No.	Part name
1	Brake restraining bolt
2	Fixed plate
3	Brake lining
4	Armature core
5	Leaf spring
6	Stationary
7	Cover
8	Gap adjusting nut
9	Torque spring
10	Stud bolt
11	Sub spring
12	Boss
13	Boss setting bolt

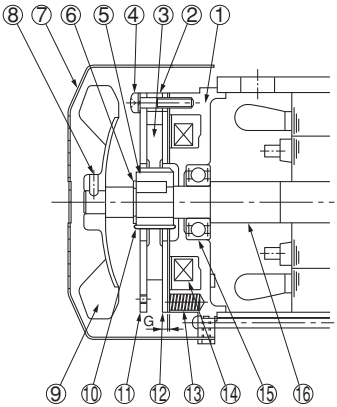

Fig.37 FB-01A1, 02A1, 05A1, 01A, 02A, 05A

No.	Part name
1	Stationary core
2	Spacer
3	Brake lining
4	Assembling bolt
5	Boss
6	Shaft retaining C-ring
7	Cover
8	Fan set bolt
9	Fan (Not provided for FB-01A1, 01A)
10	Leaf spring
11	Fixed plate
12	Armature plate
13	Spring
14	Electromagnetic coil
15	Ball bearing
16	Motor shaft

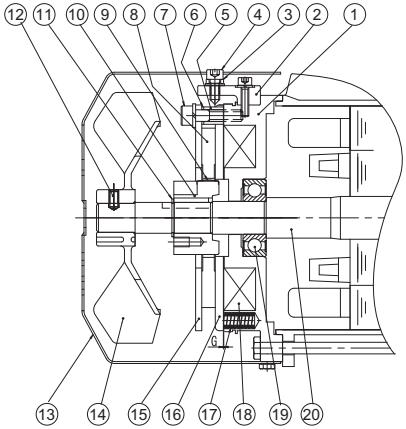

Fig.38 FB-1D

No.	Part name
1	Stationary core
2	Release fitting
3	Manual release prevention spacer
4	Brake release bolt
5	Spacer
6	Gap adjusting shim
7	Assembly bolt
8	Brake lining
9	Leaf spring
10	Boss
11	Shaft retaining C-ring
12	Fan set bolt
13	Cover
14	Fan
15	Fixed plate
16	Armature plate
17	Spring
18	Electromagnetic coil
19	Ball bearing
20	Motor shaft

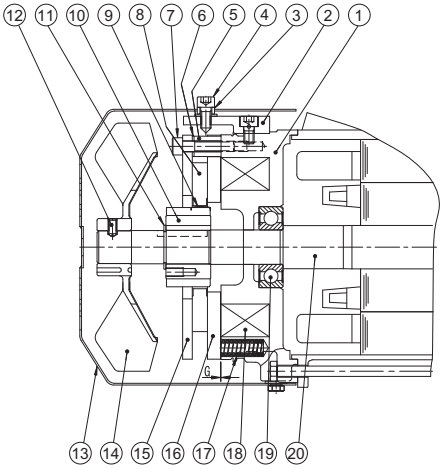

Fig.39 FB-2D

No.	Part name
1	Stationary core
2	Release fitting
3	Manual release prevention spacer
4	Brake release bolt
5	Spacer
6	Gap adjusting shim
7	Assembly bolt
8	Brake lining
9	Leaf spring
10	Boss
11	Shaft retaining C-ring
12	Fan set bolt
13	Cover
14	Fan
15	Fixed plate
16	Armature plate
17	Spring
18	Electromagnetic coil
19	Ball bearing
20	Motor shaft

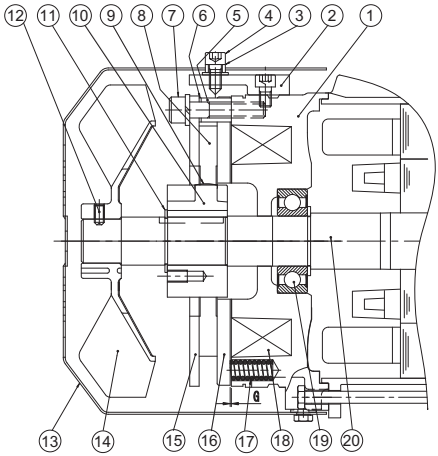

Fig.40 FB-3D

No.	Part name
1	Stationary core
2	Release fitting
3	Stud bolt
4	Adjusting washer
5	Manual release prevention spacer
6	Brake release bolt
7	Spring washer
8	Gap adjusting nut
9	Brake lining
10	Boss
11	Shaft retaining C-ring
12	Cover
13	Spring pin
14	Fan
15	Leaf spring
16	Fixed plate
17	Armature core
18	Spring
19	Electromagnetic coil
20	Ball bearing
21	Motor shaft

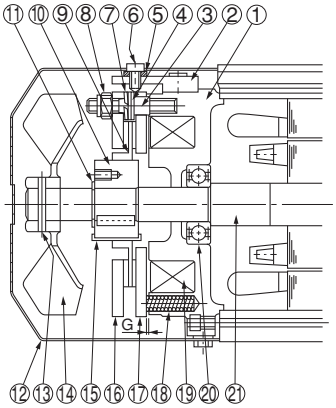

Fig.41 FB-5B, 8B

No.	Part name
1	Stationary core
2	Release fitting
3	Stud bolt
4	Adjusting washer
5	Manual release prevention spacer
6	Brake release bolt
7	Spring washer
8	Gap adjusting nut
9	Brake lining
10	Boss
11	Shaft retaining C-ring
12	Cover
13	Spring pin
14	Fan
15	Leaf spring
16	Fixed plate
17	Armature core
18	Spring
19	Electromagnetic coil
20	Ball bearing
21	Motor shaft

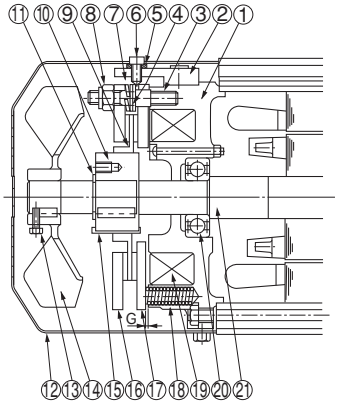

Fig.42 FB-10B, 15B

No.	Part name
1	Stationary core
2	Release fitting
3	Stud bolt
4	Adjusting washer
5	Manual release prevention spacer
6	Brake release bolt
7	Spring washer
8	Gap adjusting nut
9	Brake lining
10	Boss
11	Shaft retaining C-ring
12	Cover
13	Fan set bolt
14	Fan
15	Leaf spring
16	Fixed plate
17	Armature core
18	Spring
19	Electromagnetic coil
20	Ball bearing
21	Motor shaft

9–2) Manual Release Operation of Brake (FB-1D–15B FB-01A1–05A1 Optional:FB-01A–05A)

To manually release the brake without turning on the power, operate the brake release device as follows:

(1) Remove the brake release bolts arranged diagonal to each other, and remove the spacer. Then screw in the bolts with a hexagon wrench, and the brake will be released. Be careful not to turn the brake release bolts excessively. (Check to see if the brake is released, while turning the brake release bolts.) (See Fig.43.)

(2) To return to the original state after releasing the bolts, re-install the spacer, which was removed in step (1), to the original position for safety. (See Fig.44.)

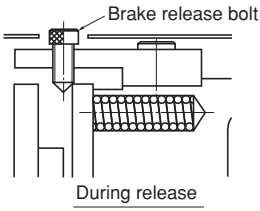

Fig.43

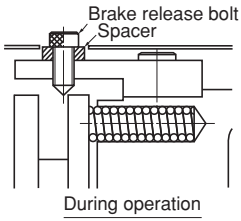

Fig.44

9–3) Gap Inspection

When the brake is used for a long time, the brake lining becomes abraded and the brake cannot be released. Periodically check the gap G as follows :

(1) Remove the cover.

(2) Insert the feeler gauge between the stationary and armature cores to measure the gap. When the gap is near the limit shown in Table 12, adjustment is necessary. Measure three points along the circumference. (The minimum thickness of the gap adjusting shim for FB-1D–3D is 0.2~0.25mm.)

Table 12 Brake Gap

Type of brake	Gap G (mm)	
	Specification (Initial value)	Limit
SB–004	0.15–0.25	0.4
FB–003 FB–005	0.15–0.25	0.4
FB–01A1, FB–01A FB–02A1, FB–02A FB–05A1, FB–05A	0.2–0.35	0.5
FB–1D(FB–1B) FB–2D(FB–2B,FB–2B1)	0.3–0.4	0.6
FB–3D(FB–3B)		0.7
FB–5B FB–8B	0.4–0.5	1.0
FB–10B FB–15B	0.4–0.5	1.2

( )in "Type of brake " is old type brake.

9–4) Gap Adjustment

When the gap nears the limit shown in Table 12 on page 39, follow these steps to, adjust the gap:

[SB–004] (See Fig.33, 34 on page 41)

(1) Remove cover ⑦.
(2) Slightly loosen set bolt ⑤. (locking agent was done)
(3) Adjast gap G by inserting the feeler gauge between the stationary core ② and armature core ③.
(4) Apply a locking agent to set bolt ⑤ and fixed lining fan.
(5) Install cover ⑦. (For water proof-type. Please check no crack on O-ring. If any, please exchange.)

[FB–003, 005] (See Fig.35,36 on page 42)

(1) Remove cover ⑧.
(2) Insert the feeler gauge between the stationary core ⑦ and armature core ④, and turn clockwise the gap adjusting nut ⑪ attached to the end of stud bolt ⑬.

Alternately turn the adjusting nuts, arranged at three locations around the circumferense, so that all three gaps will be as specified in Table 12.

(3) After adjusting the gap, check the brake's performance by turning the system power on and off a few times.
(4) Apply a locking agent to the gap adjusting nut ⑪ at that time and install cover ⑧.

[FB–01A1, 02A1, 05A1, 01A, 02A, and 05A] (See Fig.37 on page 42)

(1) Remove cover ⑦.
(2) Slightly loosen assembly bolt ④, and turn fixed plate ⑪ counterclockwise to the maximum. Then tighten the assembly bolt. After tightening, measure the gap G, and confirm that it is between the specification and limit. (After this operation, the gap will decrease by approx. 0.3mm.)
(3) After adjusting the gap, check the brake's performance by turning the system power on and off a few times.
(4) Install cover ⑦.

[FB–1D] (See Fig.38 on page 43)

(1) Remove assemble bolt ④ and manual release prevention spacer ③.
(2) Remove cover ⑬.
(3) Remove fan set bolt ⑫, and remove fan ⑭.
(4) Loosen assembly bolt ⑦, and remove spacer ⑤, gap adjusting shim ⑥, assembly bolt ⑦, and fixed plate ⑮ together as a set. Be careful not to remove assembly bolt ⑦ alone; otherwise, gap adjusting shim ⑥ will drop.
(5) Gap adjusting shim ⑥ is approx. 0.2~0.25mm thick. Reduce the number of shims according to the amount of abrasion, and reassemble spacer ⑤, gap adjusting shim ⑥, assembly bolt ⑦, and fixed plate ⑮ together as a set.
(6) Check the gap G, and if it is substantially different from the specification, readjust the shim.
(7) After adjusting the gap, check the brakes performance by turning the system power on and off a few times.
(8) Install fan ⑭, fan set bolt ⑫, and cover ⑬. Apply a locking agent to the fan set bolt at that time. Finally, install release bolt ④ and spacer ⑤.
Then install assemble bolt ④ and manual release prevention spacer ③.

[FB–2D] (See Fig.39 on page 43)

(1) Remove assemble bolt ④ and manual release prevention spacer ③.
(2) Remove cover ⑬.
(3) Remove fan set bolt ⑫, and remove fan ⑭.
(4) Loosen assembly bolt ⑦, and remove spacer ⑤, gap adjusting shim ⑥, assembly bolt ⑦, and fixed plate ⑮ together as a set. Be careful not to remove assembly bolt ⑦ alone; otherwise, gap adjusting shim ⑥ will drop.
(5) Gap adjusting shim ⑥ is approx. 0.2~0.25mm thick. Reduce the number of shims according to the amount of abrasion, and reassemble spacer ⑤, gap adjusting shim ⑥, assembly bolt ⑦, and fixed plate ⑮ together as a set.
(6) Check the gap G, and if it is substantially different from the specification, readjust the shim.
(7) After adjusting the gap, check the brakes performance by turning the system power on and off a few times.
(8) Install fan ⑭, fan set bolt ⑫, and cover ⑬. Apply a locking agent to the fan set bolt at that time. Finally, install release bolt ④ and spacer ⑤.
Then install assemble bolt ④ and manual release prevention spacer ③.

[FB–3D] (See Fig.40 on page 44)

(1) Remove assemble bolt ④ and manual release prevention spacer ③.
(2) Remove cover ⑬.
(3) Remove fan set bolt ⑫, and remove fan ⑭.
(4) Loosen assembly bolt ⑦, and remove spacer ⑤, gap adjusting shim ⑥, assembly bolt ⑦, and fixed plate ⑮ together as a set. Be careful not to remove assembly bolt ⑦ alone; otherwise, gap adjusting shim ⑥ will drop.
(5) Gap adjusting shim ⑥ is approx. 0.2~0.25mm thick. Reduce the number of shims according to the amount of abrasion, and reassemble spacer ⑤, gap adjusting shim ⑥, assembly bolt ⑦, and fixed plate ⑮ together as a set.
(6) Check the gap G, and if it is substantially different from the specification, readjust the shim.
(7) After adjusting the gap, check the brakes performance by turning the system power on and off a few times.
(8) Install fan ⑭, fan set bolt ⑫, and cover ⑬. Apply a locking agent to the fan set bolt at that time. Finally, install release bolt ④ and spacer ⑤.
Then install assemble bolt ④ and manual release prevention spacer ③.

[FB–5B, 8B, 10B and 15B] (See Fig.38 on page 41, Fig. 42 on page 45)

(1) Remove assemble bolt ⑥ and manual release prevention spacer ⑤.

(2) Remove cover ⑫.

(3) Insert the feeler gauge between stationary core ① and armature core ⑰, and turn clockwise the gap adjusting nut ⑧ attached to the end of stud bolt ③. When adjustment is impossible due to an excessively large gap, reduce the number of adjusting washers ④. Alternately turn the adjusting nuts, arranged at three locations around the circumference, so that all three gaps will be as specified in Table 12.

(4) After adjusting the gap, check the brake's performance by turning the system power on and off a few times.

(5) Install cover ⑫.
Then install assemble bolt ⑥ and manual release prevention spacer ⑤.

9–5) Brake Lining Replacement

When the thickness of the brake lining has reached the limit shown in Table 13 (when the brake gap has reached the limit shown in Table 12 on page 46 after gap adjustment in for FB-01A1, 02A1, 05A1, 01A, 02A, and 05A), Contact Sumitomo for brake lining replacement.

Table 13 Brake Lining Dimension

Brake Type	Brake Lining Dimension	Initial Thickness to (mm)	Thickness Limit to (mm)
SB–004		5.0	4.6
FB–003 FB–005		7.0	6.2
FB–01A1, FB–01A FB–02A1, FB–02A FB–05A1, FB–05A		7.0	
FB–1D(FB–1B)		7.0	6.0
FB–2D(FB–2B, FB–2B1)		8.8	7.8
FB–3D(FB–3B)		9.0	8.0
FB–5B, 8B		10	6.0

( )in "Brake Type" is old type brake

10. Troubleshooting

· If any abnormality is found in the gearmotor, refer to Table 14 below and take appropriate measures as soon as possible. If the abnormality cannot be eliminated, contact our nearest agent, dealer or sales office.

Table 14 Troubleshooting

Type of Trouble			Cause	Remedy
The motor does not run in the unloaded condition.			Power failure	Contact the power supply company.
			Defective electric circuit	Check the defective portion of electric circuit.
			Fusing	Replace the fuse.
			Safety device at work	Eliminate a cause of incorrect safety device actuation.
			Locking of the load	Check and investigate the load and the safety device.
			Poor contact of swich	Adjust the contact.
			Disconnection of motor stator wiring	Repair at a specialized workshop.
			Broken bearing	Repair at a specialized workshop.
			Defective cover switch (0.1–0.75kW single-phase motor	Repair at specialized workshop.
			Broken capacitor(single-phase motor)	Replacement of capacitor at specialized workshop.
			Three-phase motor acting as single-phase motor (3-phase motor)	Check the power sorce using a voltmeter. Repair or replace the motor, transformer coils, contactors and fuses.
			Brake :Rust on friction surface	Cleaning of brake (lining) at special workshop
			Brake :Poor gap adjustment	Fine adjustment of brake gap. (P. 46–49)
The motor works but the output shaft does not work.			Defective gear drives due to overloading etc.	Repair at specialized workshop.
The output shaft rotates without loading, but	When loaded	Switch is overheated.	Insufficient switch capacity	Replace the switch with one having the specified capacity.
			Overloading	Reduce the load to the specified level.
		Fuse is cut.	Insufficient fuse capacity	Replace the fuse with one having a specified capacity.
			Overloading	Reduce the load to the specified level.
			Defective governor switch (0.1—0.75kW single-phase motor)	Repair at specialized workshop.
		Rotating speed does not increase and overheated.	Voltage drop	Consult with the power supply company.
			Overloading	Reduce the load to the specified level.
			Drop in capacitance (single-phase motor)	Replace capacitor at specialized workshop
			Short circuit of motor stator winding	Repair the stator at a specialized workshop.
		Motor stops.	The key is not set on the shaft	Set the key.
			Burned bearing	Repair at a specialized workshop.
			Defective adjustment of the safety device	Adjust the safety device.
	The motor rotates reversely.		Wrong connection	Connect correctly.
	Disconnected fuse.		Short-circuit of the lead wire	Replace the fuse.
			Poor connection of the motor with the starter	Connect firmly.
Excessive rise in temperature			Overloading	Reduce the load to a specified level.
			Increased or decreased voltage	Consult with the power supply company.
			Defective governor switch (in 0.1–0.75kW single-phase motor)	Repair at a specialized workshop.
			Deteriorated condenser capacity (single-phase motor)	Replace the condenser.
			Ambient temperature is too high.	Improve the ventilation method.
			Failure due to overloading to shaft and gear	Repair at a specialized workshop.

Table 14 Troubleshooting

Type of Trouble		Cause	Remedy
Grease leakage	Grease leakage from the output section	Damaged oil seal.	Replace the oil seal.
	Grease leakage from the casing seam	Slacked bolts.	Tighten the bolts.
Abnormal noise or excessive vibration		Damaged gear.	Repair at a specialized workshop.
		Distortion of the housing due to rough bed surface.	Flatten the bed surface or adjust the bed with the liner.
		Resonance resulting from insufficient rigidity of the bed.	Improve rigidity of the bed by reinforcement.
		Misalignment of connecting shafts.	Realign or use flexible coupling.
		Vibration transferred from the connected machine.	Detect vibration sources by running the gearmotor independently.
Abnormal noise in the motor		Foreign substances inside the motor.	Eliminate the foreign substances.
		Damaged bearing.	Repair at a specialized workshop.
		Improper brake gap adjustment.	Adjust the brake gap. (Refer to page 46–49)
		Worn brake lining.	Replace the brake lining. (Refer to page 49)
		Burned magnetic coil in the brake assembly.	Replace the magnetic coil.
		Failure of the rectifier	Replace the rectifier.
		Disengagement or failure of leaf spring in the brake boss.	Replace the leaf spring.
		Defective governor switch (0.1-0.75kW single-phase motor)	Repair at a specialized workshop.
Ineffective braking function	Brake does not work.	Releasing bolt not returned to the original position.	Return the bolt to the original position and readjust the gap.
	The brake slips. Braking response is slow.	A fast braking circuit is not working.	Shift to the fast braking action (Refer to page 27–34)
		Foreign substances or oil are adhered to the brake lining.	Remove foreign substances and clean the lining surface with a dry cloth.
		Worn brake lining.	Adjust the brake gap. Replace the brake lining.
		Uneven brake gap.	Adjust the brake gap.
		Overloading.	Reduce the load or apply a larger brake frame.
		Insufficient recovery of the releasing bolt.	Reset the releasing bolt to the original position and readjust the gap.
Inverter tripping	Shut-off due to overcurrent	Sudden acceleration / deceleration	Make the acceleration / deceleration time longer.
		Sudden change in load	Decrease the load.
	Grounding overcurrent	Grounding on the output side	Make correction to eliminate grounding
	DC overcurrent	Short - circuiting on the output side	Make correction to eliminate short -circuiting. Check cables.
	Shut-off due to regenerative overvoltage	Sudden deceleration	Make the deceleration time longer. Reduce the braking frequency.
	Thermal relay operation	Overloading	Decrease the load to the specified value.

11. Construction Drawings

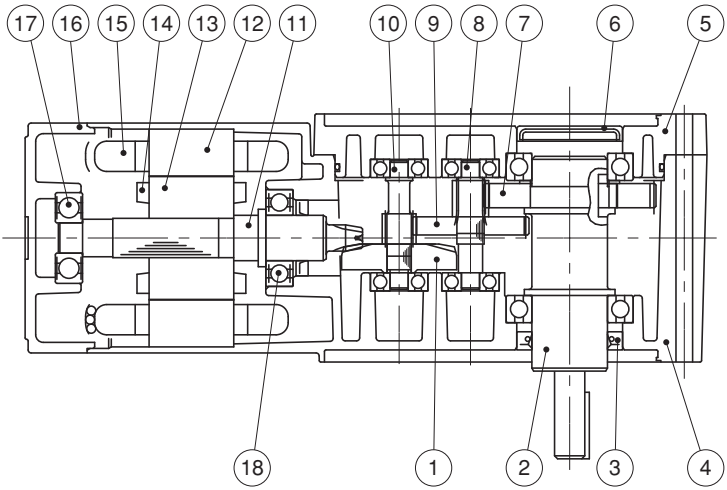

Fig.44 RNFM0025-01L-240

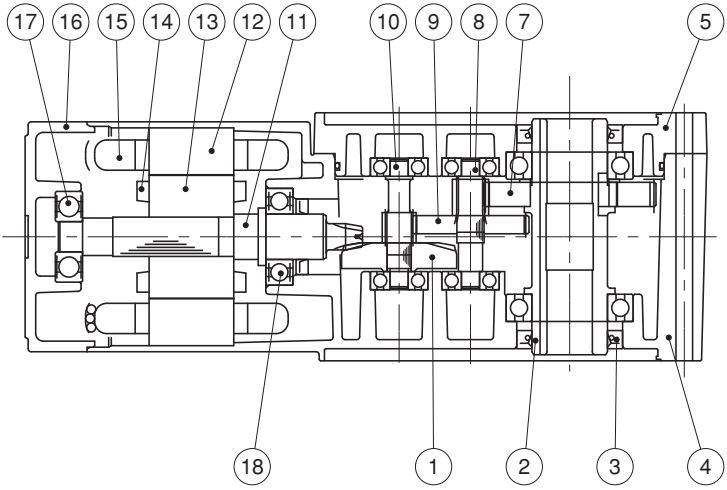

Fig.45 RNYM0025-03-240

No.	Part name	No.	Part name	No.	Part name
1	Hypoid gear	7	Gear	13	Rotor core
2	Output shaft	8	Pinion shaft	14	Rotor conductor short circuit ring
3	Oil seal	9	Gear	15	Stator windings
4	Casing	10	Pinion shaft	16	End bracket
5	Cover	11	Hypoid pinion shaft	17	Bearing metal
6	Seal cap	12	Stationary core	18	Bearing metal

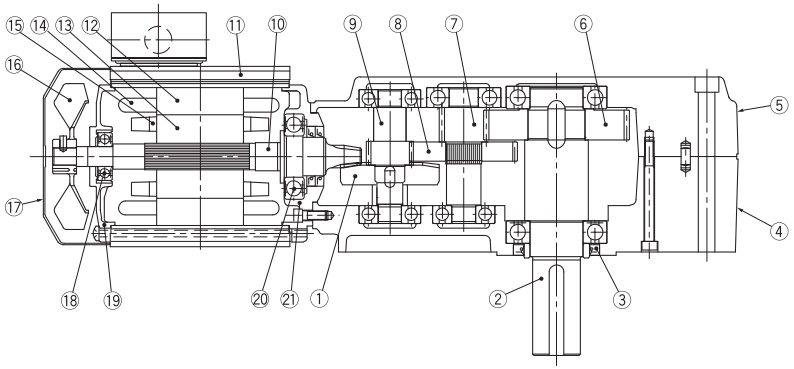

Fig.46 RNFM1-50R-120

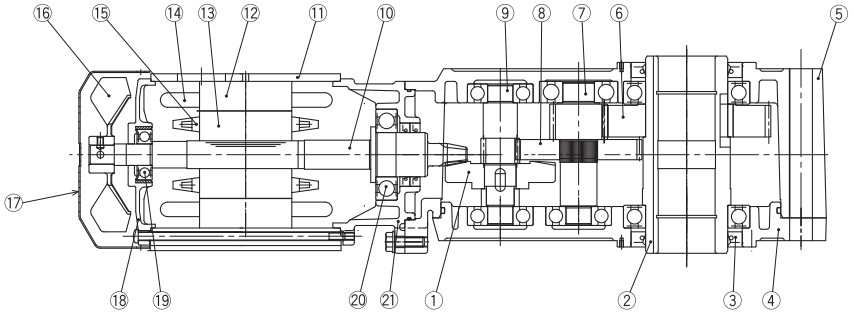

Fig.47 RNYM1-1530-120

No.	Part name	No.	Part name	No.	Part name
1	Hypoid gear	8	Gear	15	Rotor conductor short circuit ring
2	Output shaft	9	Pinion shaft	16	Fan
3	Oil seal	10	Hypoid pinion shaft	17	Fan cover
4	Case (1)	11	Motor frame	18	End bracket
5	Case (2)	12	Stationary core	19	Bearing metal
6	Gear	13	Rotor core	20	Bearing metal
7	Pinion shaft	14	Stator windings	21	Cyclo flange bracket

12. Warranty

The scope of our warranty for our products is limited to the range of our manufacture.
Warranty (period and contents)

Warranty Period	The warranty period for the Products shall be 18 months after the commencement of delivery or 18 months after the shipment of the Products from the seller,s works or 12 months from the Products coming into operation, whether comes first.
Warranty Condition	In case that any problems, troubles or damages on the Products arise due to the defects in the Products during the above "Warranty Period", although the Products are appropriately and properly installed in, connected or combined to the equipment or machines, or maintained in accordance with the maintenance manual and are properly operated under the conditions as described in the catalogue or otherwise as agreed upon in writing between the Seller and the Buyer or its customers, the Seller will Provide, at its sole discretion, appropriate repair or replacement on the Products free of charge, except as stipulated in the "Exception for Warranty" as described below. However, in the event that the Products is installed in, connected or combined to or integrated into the equipment or machines, the Seller shall not reimburse the costs for removal or re-installation of the Products or other incidental costs related thereto and any lost opportunity, loss of profit or any other incidental or consequential losses or damages incurred by the Buyer or its customers.
Exception for Warranty	Notwithstanding the above warranty, the warranty as set forth herein shall not be applied to the problems, troubles or damages on the Products which are caused by: 1. installations, connections, combinations or integration of the Products in or to the other equipment or machines, which are rendered by any person or entity other than the Seller, 2. the insufficient maintenance or improper operation by the Buyer or its customers, such that the Product is not appropriately maintained in accordance with the maintenance manual provided or designated by the Seller, 3. the improper use or operation of the Products by the Buyer or its customers which are not informed to the Seller, including, without limitation, the Buyer's or its customers' operation of the Products not in conformity with the specifications, or use of the lubrication oil in the Products which is not recommended by the Seller, 4. troubles, problems or damages on any equipment or machines in or to which the Products are installed, connected or combined or installed, or any specifications particular to the Buyer or its customers, or 5. any changes, modifications, improvements or alterations on the Products or those functions which are rendered on the Products by any person or entity other than the Seller, 6. any parts in the Products which are supplied or designated by the Buyer or its customers, 7. earthquake, fire, flood, sea-breeze, gas, thunder, acts of God or any other reasons beyond the control of the Seller, 8. waste, exhaustion, normal tear or wear, or deterioration on the parts of the Products, such as bearing, oil-seal. 9. any other troubles, problems or damages on the Products which are not attributable to the Seller.

Sumitomo Heavy Industries, Ltd.
POWER TRANSMISSION & CONTROLS GROUP
ThinkPark Tower 1-1, Osaki 2-Chome Shinagawa-ku, Tokyo 141-6025 Japan
Tel: (03)6737-2511 Fax: (03)6866-5160

Specifications, dimensions, and other items in the catalog are subject to change without prior notice.

NM2201E-5.1

Printed in Japan
2010.03